2021 **Buyer's Guide**

finch

Welcome to the Finch Buyer's Guide! All of our products are included with dimensions, weights, and shipping prices. Since you work hard every day, we hope this will make your Finch experience easy and fun!

NOTE: Shipping prices are configured for shipping just one item. When shipping more than six items, it may be better to ship the items on a pallet via FedEx Freight. We will attempt to always ship your items in the most practical and cost-effective way.

Table of Contents

SeaAira....4
SunSurf Lounge....16
Mission Deep Seating....18
Van Buren....26
Pillows....34
Avonlea....35
Porch Rockers....38
SummerSide Bar....40
Fire Tables/Pits....41
Ice Tables/Pit....44
Great Bay....46
Keystone....62
Mission Dining....68
Garden....73
Picnic Tables....79
Children's....81
Wood Table Sets....83
Park Benches....87
Umbrellas....88
Warranty & Care....90
Shipping Zones & Times....92

Feel the Difference™

SeaAira Lounge Chair

SE-Lo *Catalog Pg. 34* 4 Position Back

Item #	lbs	Zones	2	3	4	5	6	7	8
SE-Lo	70		115.08	118.80	121.51	128.15	135.49	143.37	146.39

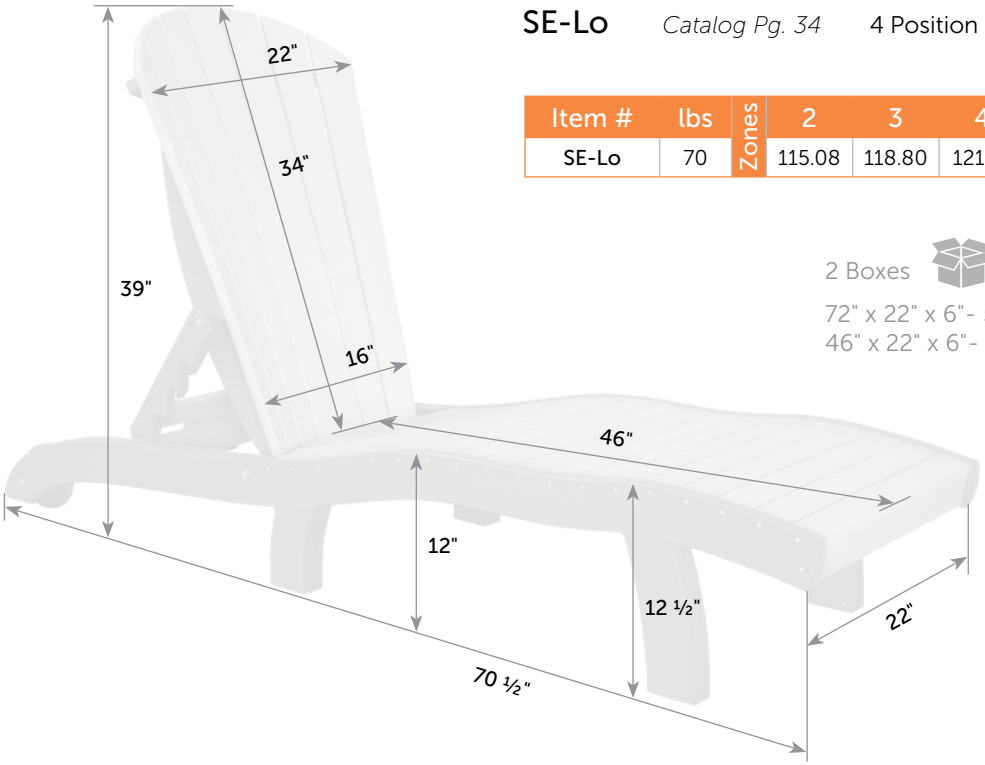

2 Boxes

72" x 22" x 6"- 57 lb
46" x 22" x 6"- 13 lb

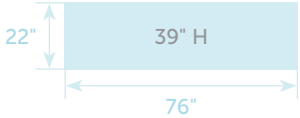

SeaAira Lounge Chair with Arms

SE-LoA *Catalog Pg. 34* 4 Position Back

Item #	lbs	Zones	2	3	4	5	6	7	8
SE-LoA	80		115.08	118.80	121.51	128.15	135.49	143.37	146.39

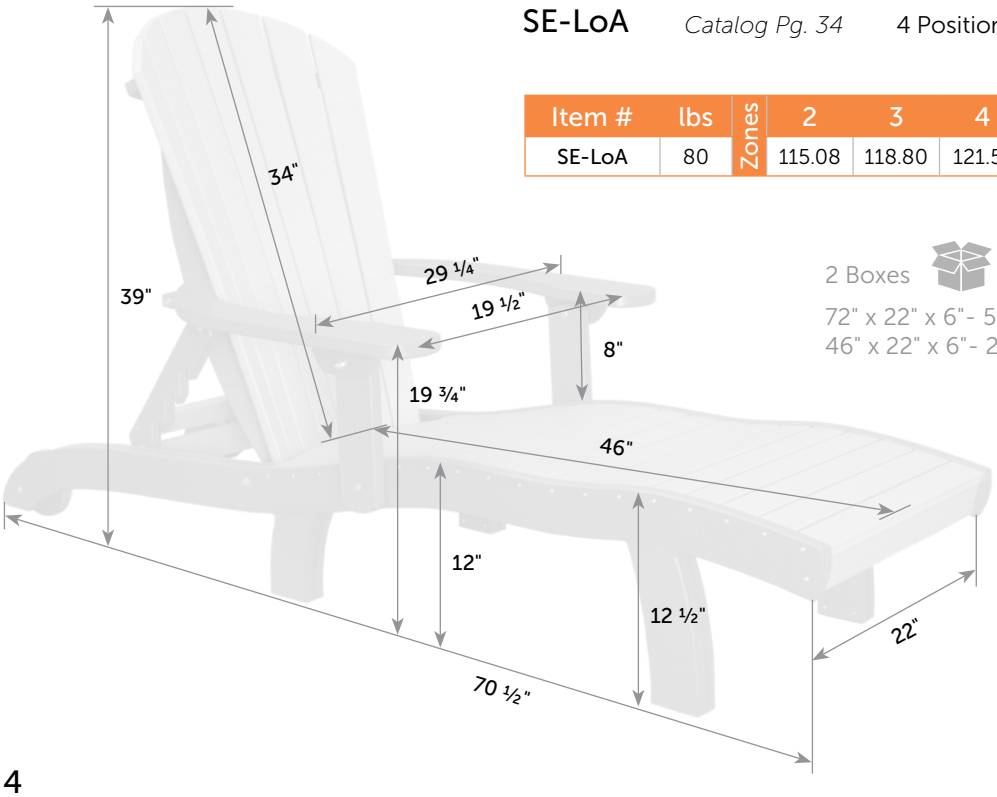

2 Boxes

72" x 22" x 6"- 57 lb
46" x 22" x 6"- 23 lb

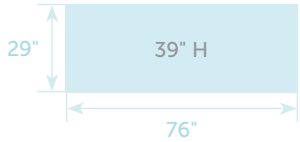

SeaAira Adirondack Chair

SE-Ch *Catalog Pg. 35*

Box
25" x 7" x 46"

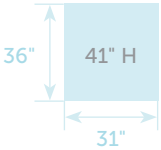

Item #	lbs	Zones	2	3	4	5	6	7	8
SE-Ch	40		33.31	38.61	42.12	48.38	55.13	61.09	69.81

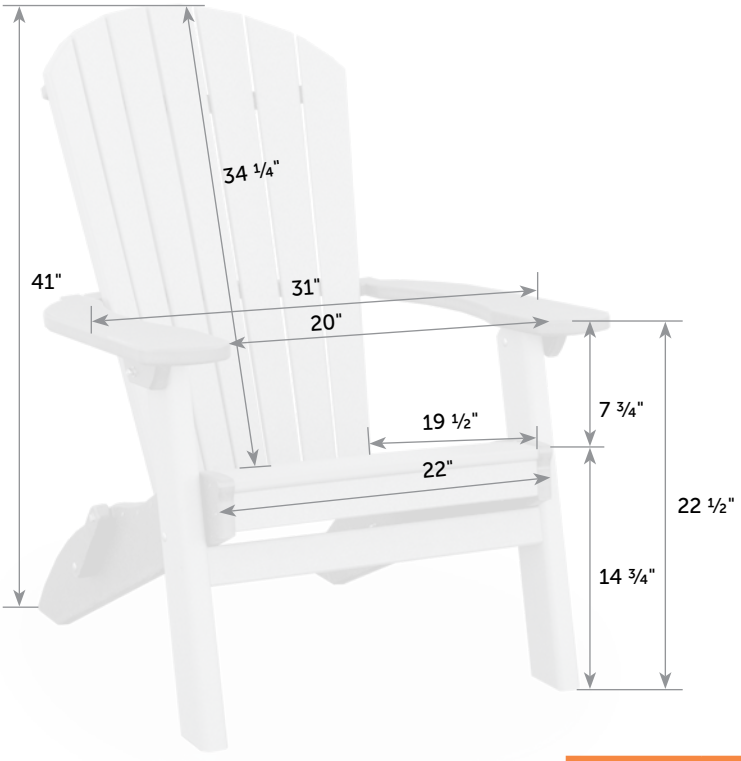

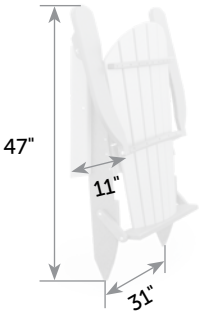

SeaAira Adirondack Folding Chair

SE-ChF *Catalog Pg. 35*

Box
25" x 11" x 43"

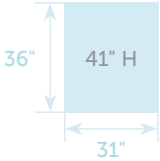

Item #	lbs	Zones	2	3	4	5	6	7	8
SE-ChF	43		33.31	38.61	42.12	48.38	55.13	61.09	69.81

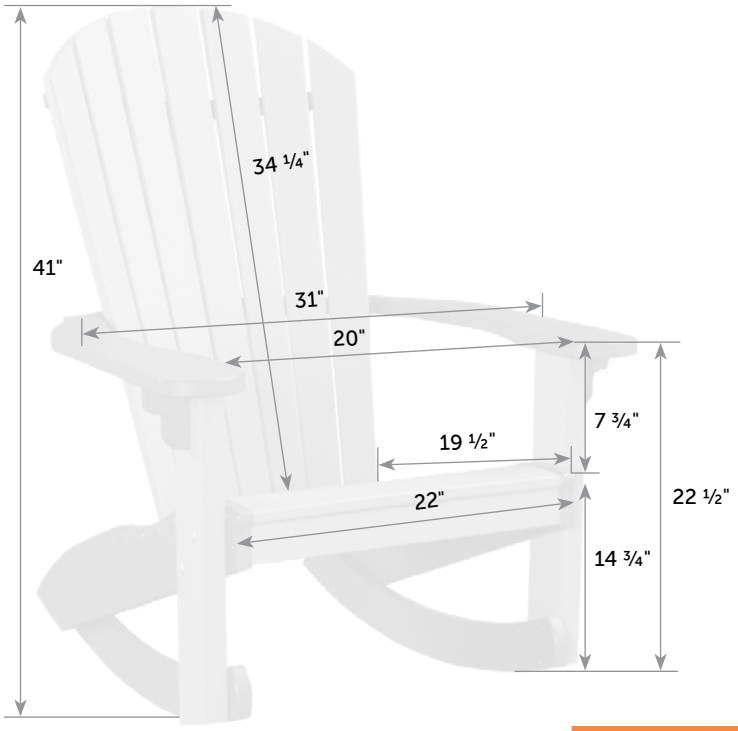

SeaAira Adirondack Rocker

SE-Ro *Catalog Pg. 35*

Box
25" x 7" x 46"

Item #	lbs	Zones	2	3	4	5	6	7	8
SE-Ro	45		35.00	39.00	45.00	49.00	55.00	65.00	69.00

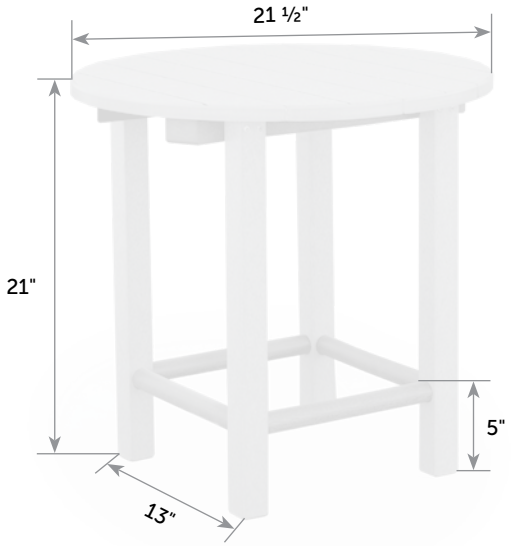

21" SeaAira Side Table

SE-TaS-Di *Catalog Pg. 35, 41, 81*

Box
23" x 6" x 23"

Item #	lbs	Zones	2	3	4	5	6	7	8
SE-TaS-Di	12		23.35	26.05	27.92	31.59	37.38	41.73	47.58

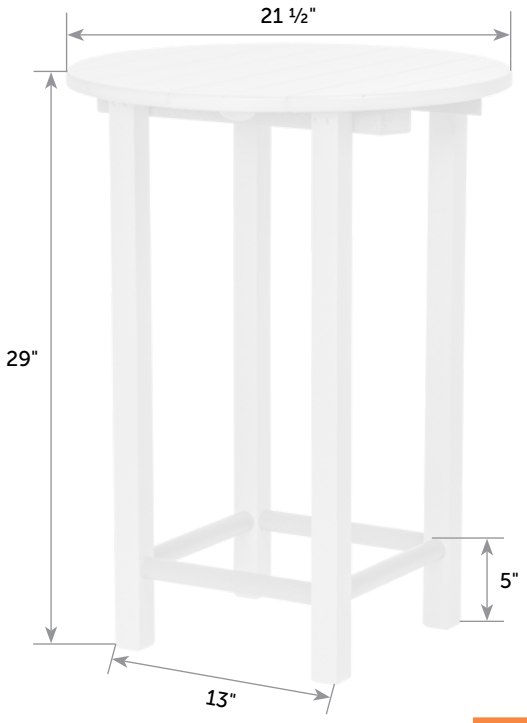

21" SeaAira Side Counter Table

SE-TaS-Co *Catalog Pg. 85*

Box
22" x 6" x 30"

Item #	lbs	Zones	2	3	4	5	6	7	8
SE-TaS-Co	14		23.35	26.05	27.92	31.59	37.38	41.73	47.58

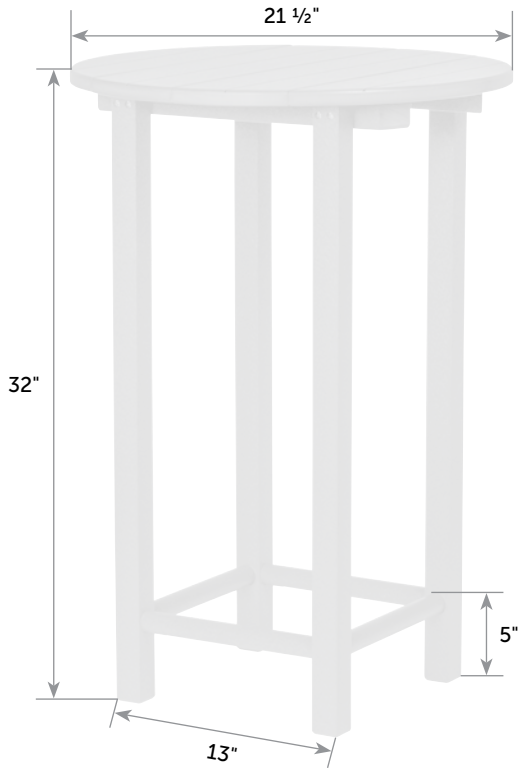

21" SeaAira Side Bar Table

SE-TaS-Ba *Catalog Pg. 89*

Box
22" x 6" x 33"

Item #	lbs	Zones	2	3	4	5	6	7	8
SE-TaS-Ba	15		23.35	26.05	27.92	31.59	37.38	41.73	47.58

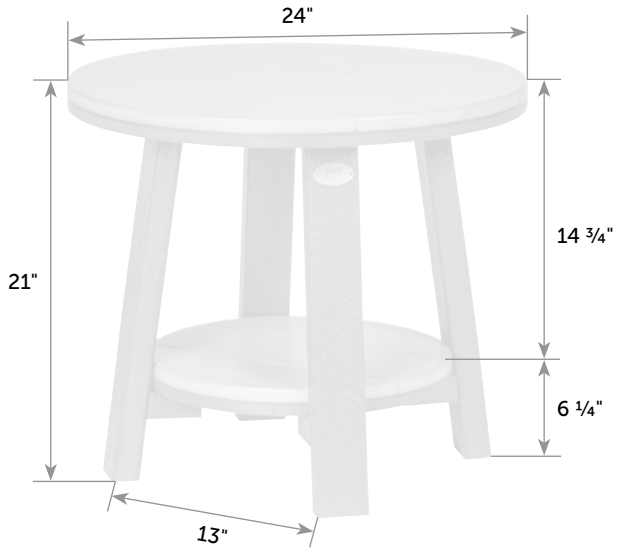

24" SeaAira Bistro Table

SE-TaB-Di *Catalog Pg. 35, 81*

Box
24" x 6" x 24"

Item #	lbs	Zones	2	3	4	5	6	7	8
SE-TaB-Di	32		28.00	30.00	32.00	35.00	39.00	45.00	49.00

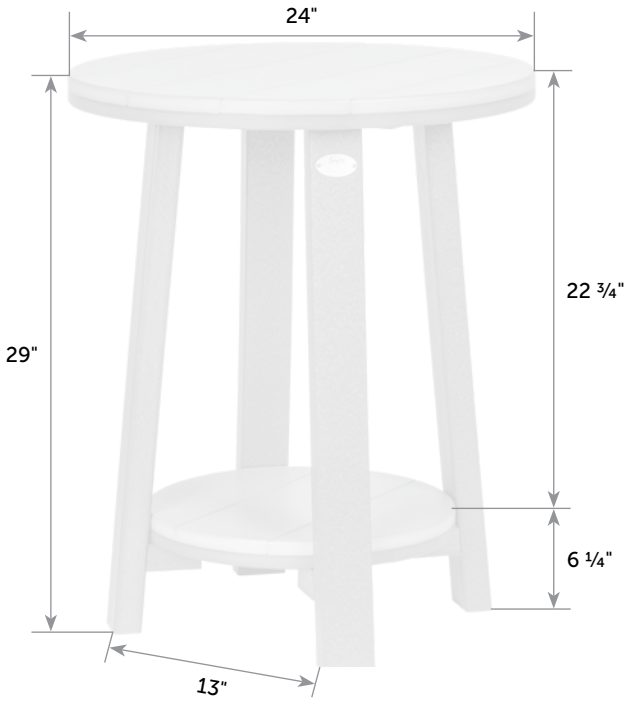

24" SeaAira Bistro Counter Table

SE-TaB-Co *Catalog Pg. 85*

Box
25" x 7" x 30"

Item #	lbs	Zones	2	3	4	5	6	7	8
SE-TaB-Co	35		30.03	34.19	37.87	44.54	50.68	57.54	65.82

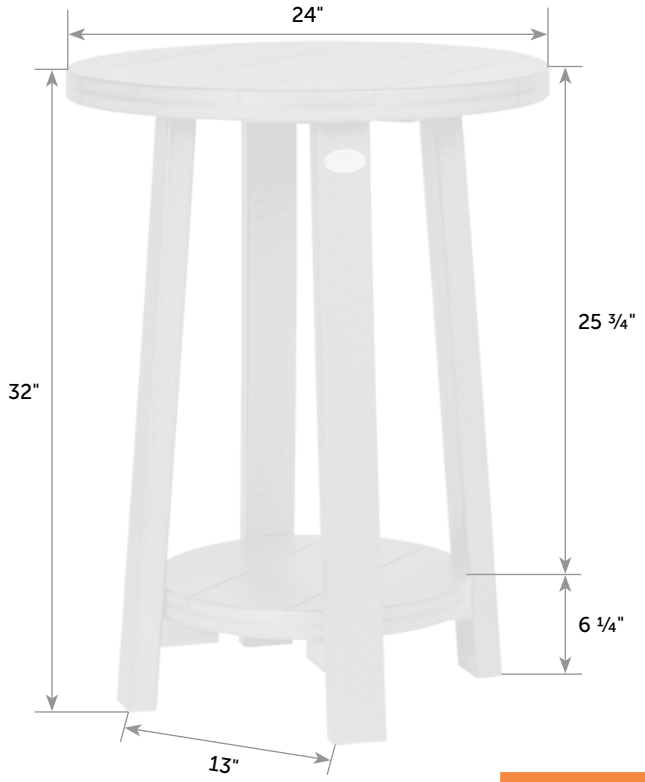

24" SeaAira Bistro Bar Table

SE-TaB-Ba *Catalog Pg. 89*

Box
25" x 7" x 33"

Item #	lbs	Zones	2	3	4	5	6	7	8
SE-TaB-Ba	36		30.03	34.19	37.87	44.54	50.68	57.54	65.82

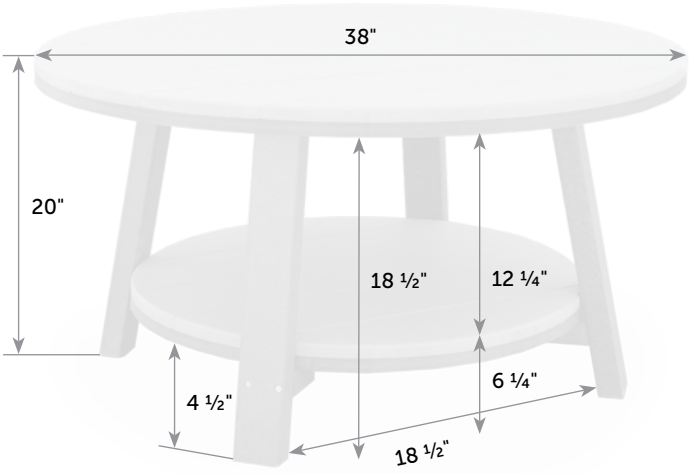

SeaAira 38" Conversation Table

SE-TaC-38r *Catalog Pg. 35, 41*

Box
38" x 6" x 38"

Item #	lbs	Zones	2	3	4	5	6	7	8
SE-TaC-38r	60		61.00	65.00	69.00	76.00	82.00	89.00	97.00

Updated

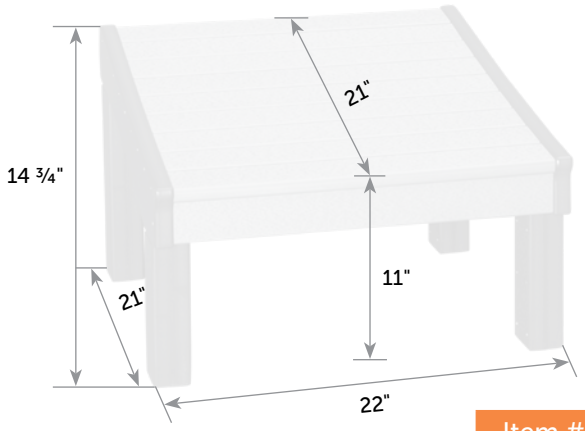

SeaAira Ottoman

SE-Ot *Catalog Pg. 35*

Box

22" x 6" x 22"

Item #	lbs	Zones	2	3	4	5	6	7	8
SE-Ot	10		23.00	24.00	24.00	25.00	26.00	28.00	29.00

NEW!

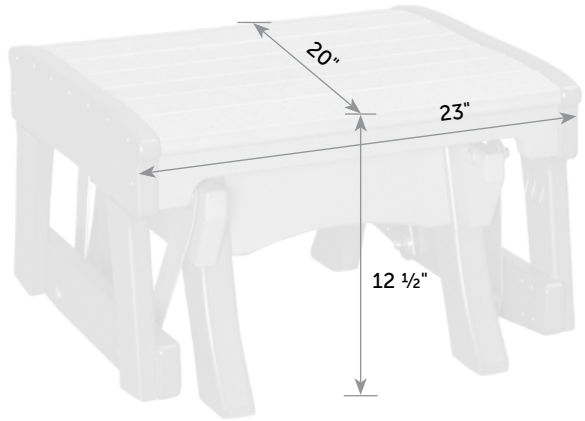

SeaAira Gliding Ottoman

SE-OtG *Catalog Pg. 41*

Box

21" x 10" x 26"

Item #	lbs	Zones	2	3	4	5	6	7	8
SE-OtG	10		24.00	25.00	26.00	26.00	27.00	27.00	28.00

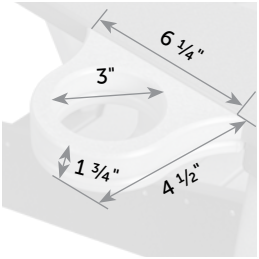

Cup Holder

CU

Catalog Pg. 35, 41

Box
6" x 6" x 6"

Item #	lbs	Zones	2	3	4	5	6	7	8
CU	2		15.00	15.00	16.00	16.00	17.00	17.00	18.00

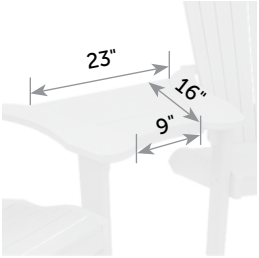

SeaAira Table Attachment

SE-At

Catalog Pg. 35

Box
23" x 6" x 23"

Table attaches easily with 4 thumb-screws.

Item #	lbs	Zones	2	3	4	5	6	7	8
SE-At	5		24.00	25.00	26.00	27.00	27.00	28.00	28.00

Seat Cushion for SeaAira Adirondack Chair

SE-CuC *Catalog Pg. 35*

Box
23" x 6" x 23"

Item #	lbs	Zones	2	3	4	5	6	7	8
SE-CuC	3		22.00	23.00	24.00	24.00	25.00	25.00	26.00

Seat Cushion for SeaAira Lounge Chair

SE-CuL *Catalog Pg. 34*

Box
23" x 6" x 23"

Item #	lbs	Zones	2	3	4	5	6	7	8
SE-CuL	3		22.00	23.00	24.00	24.00	25.00	25.00	26.00

Neck Pillows

PI-Ne *Catalog Pg. 35*

Box
6" x 6" x 14"

Item #	lbs	Zones	2	3	4	5	6	7	8
PI-Ne	1		19.00	19.00	20.00	20.00	20.00	21.00	22.00

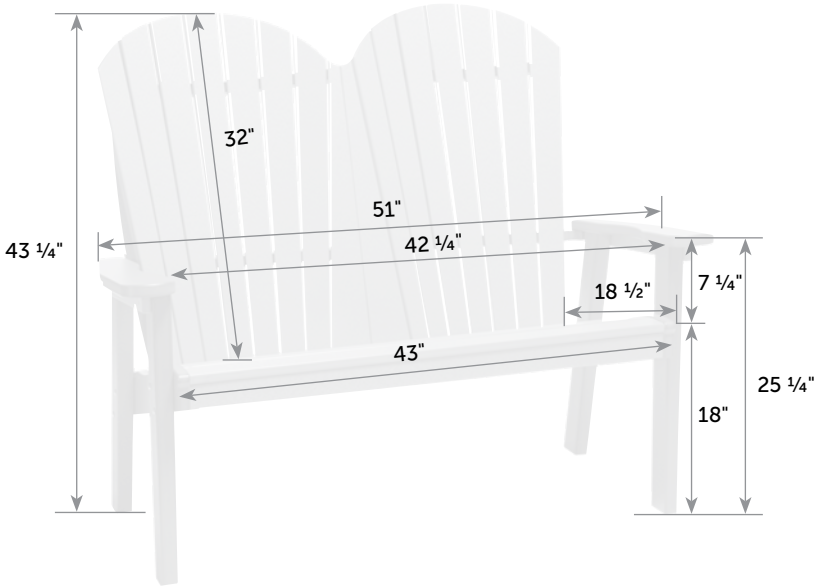

SeaAira Adirondack Bench

SE-Be *Catalog Pg. 41*

Box
42" x 6" x 42"

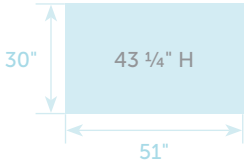

Item #	lbs	Zones	2	3	4	5	6	7	8
SE-Be	71		204.00	212.00	216.00	227.00	239.00	249.00	265.00

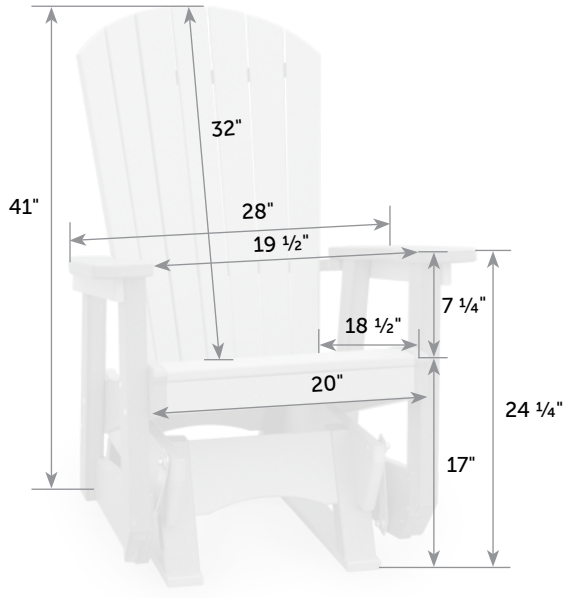

SeaAira Adirondack Glider

SE-Gl *Catalog Pg. 41*

2 Boxes

25" x 7" x 46"- 40 lb
26" x 10" x 21"- 20 lb

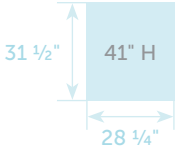

Item #	lbs	Zones	2	3	4	5	6	7	8
SE-Gl	60		59.00	65.00	69.00	79.00	95.00	105.00	119.00

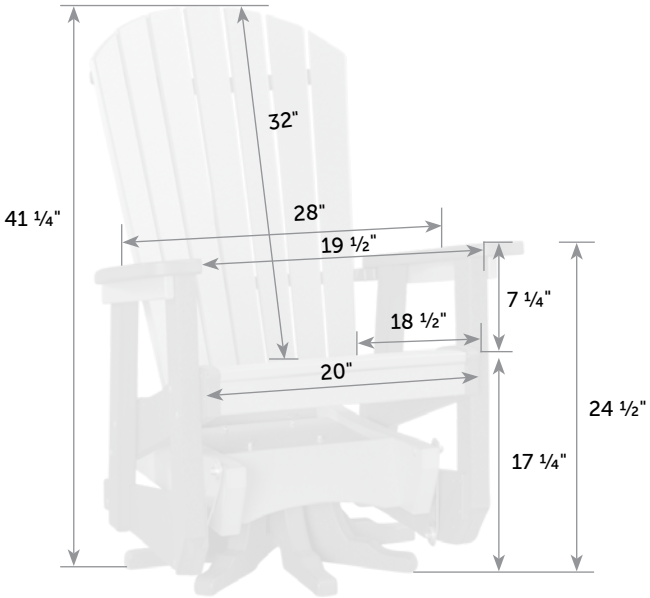

SeaAira Adirondack Swivel Glider

SE-GlS *Catalog Pg. 41*

2 Boxes

25" x 7" x 46"- 45 lb
25" x 9" x 25"- 30 lb

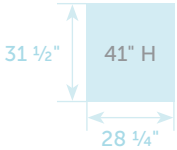

Item #	lbs	Zones	2	3	4	5	6	7	8
SE-GlS	75		65.00	69.00	75.00	85.00	99.00	109.00	125.00

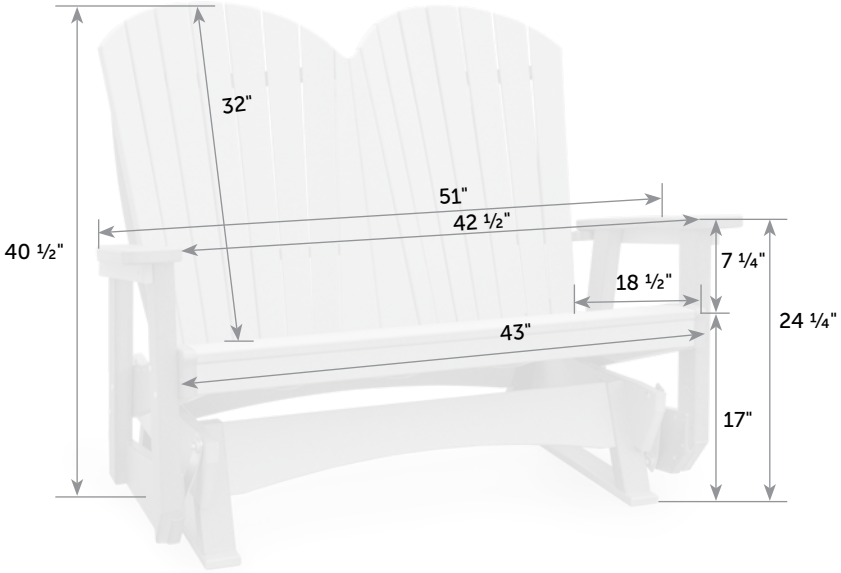

SeaAira Adirondack Double Glider

SE-GlD *Catalog Pg. 41*

3 Boxes

48" x 4" x 33"- 40 lb
25" x 11" x 43"- 40 lb
22" x 6" x 45"- 25 lb

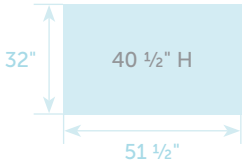

Item #	lbs	Zones	2	3	4	5	6	7	8
SE-GlD	105		279.00	289.00	299.00	309.00	325.00	339.00	349.00

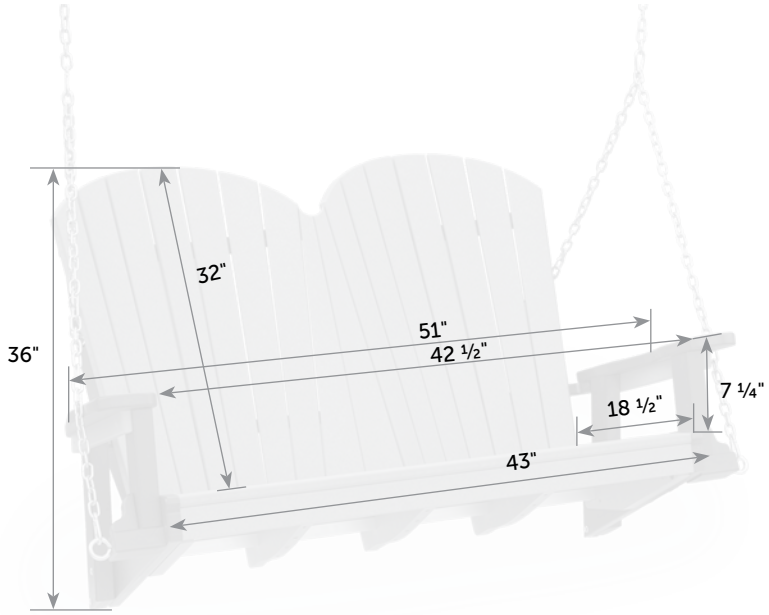

SeaAira Adirondack Swing

SE-Sw *Catalog Pg. 41*

Freight

Item #	lbs	Zones	2	3	4	5	6	7	8
SE-Sw	70		379.00	405.00	429.00	455.00	479.00	505.00	529.00

SunSurf Lounge

SunSurf Lounge

SU-Lo

Catalog Pg. 43

Box
22" x 6" x 70"

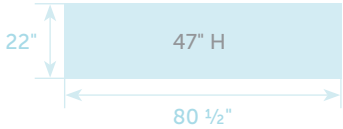

Item #	lbs	Zones	2	3	4	5	6	7	8
SU-Lo	60		95.00	99.00	105.00	109.00	115.00	125.00	129.00

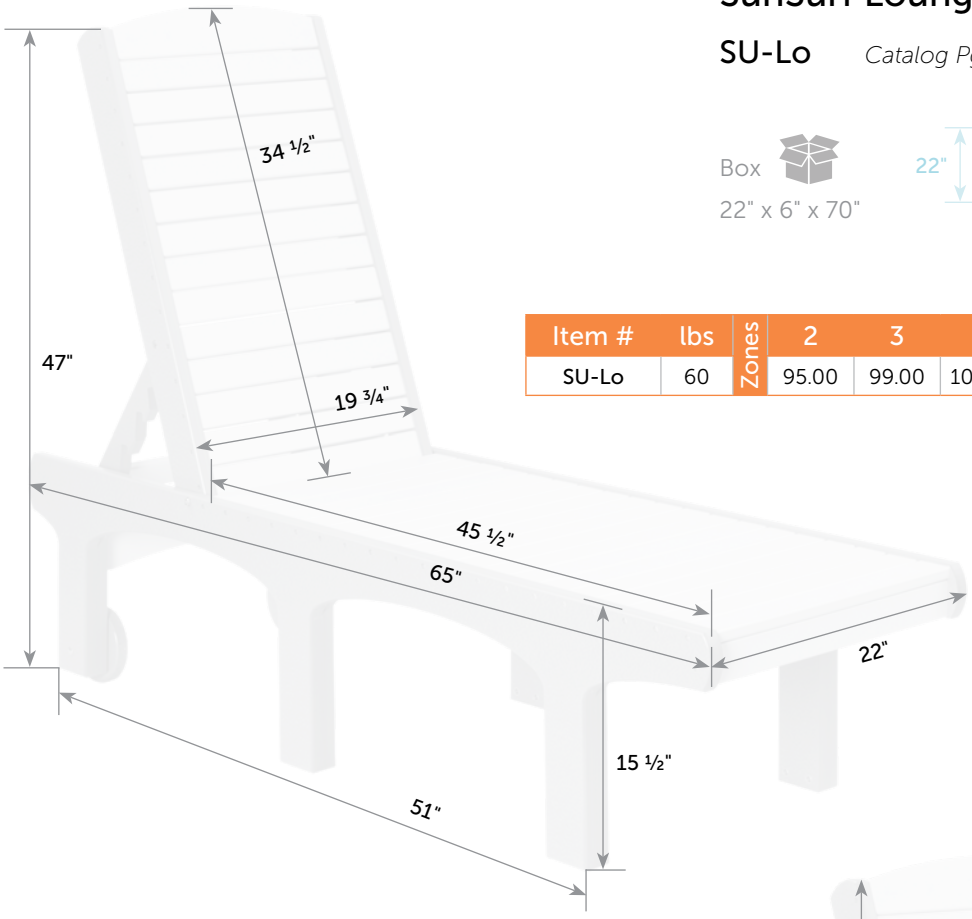

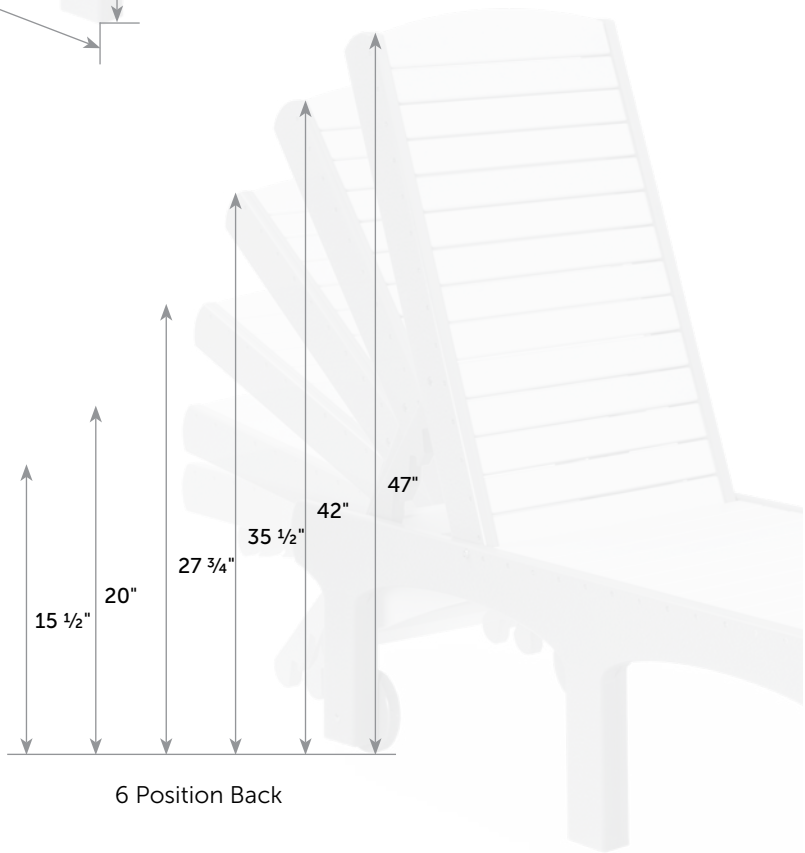

6 Position Back

Seat Cushion for SunSurf Lounge

SU-Cu *Catalog Pg. 43*

Box

23" x 6" x 23"

Item #	lbs	Zones	2	3	4	5	6	7	8
SU-Cu	3		22.00	23.00	24.00	24.00	25.00	25.00	26.00

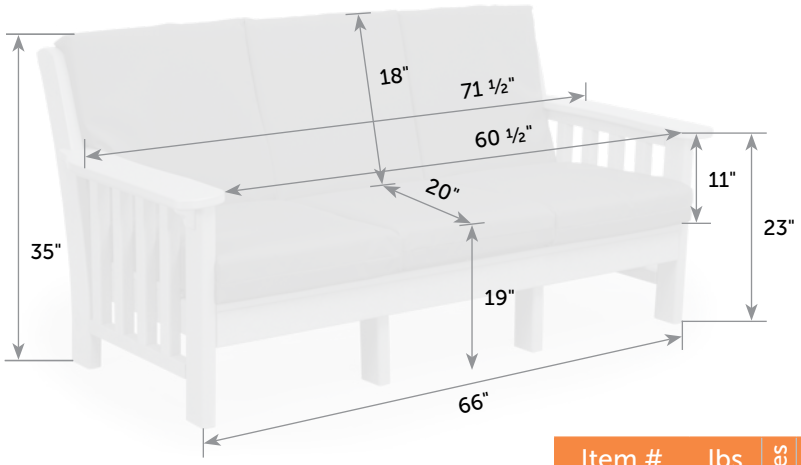

Cushions included

Mission Sofa

MI-So *Catalog Pg. 47*

5 Boxes

22" x 6" x 45"- 11 lb (x3)
17" x 6" x 73"- 70 lb
34" x 5" x 34"- 37 lb

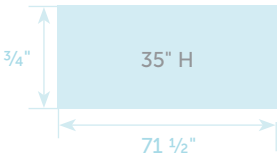

Item #	lbs	Zones	2	3	4	5	6	7	8
MI-So	140		189.00	198.00	206.00	220.00	236.00	253.00	270.00

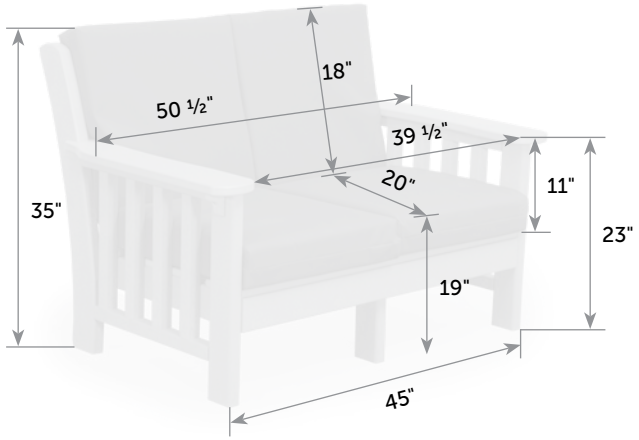

Cushions included

Mission Love Seat

MI-Lo *Catalog Pg. 47*

4 Boxes

22" x 6" x 45"- 11 lb (x2)
22" x 6" x 45"- 50 lb
34" x 5" x 34"- 33 lb

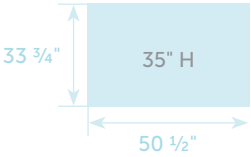

Item #	lbs	Zones	2	3	4	5	6	7	8
MI-Lo	105		129.00	135.00	139.00	149.00	165.00	179.00	195.00

Choice of 5" or 7" seat cushions

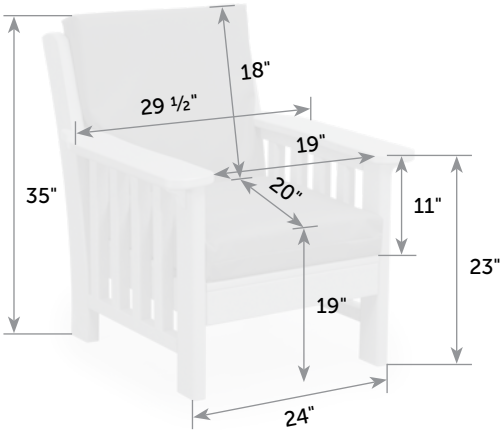

Choice of 5" or 7" seat cushions

Mission Chair

MI-Ch *Catalog Pg. 47*

2 Boxes

22" x 6" x 45"- 11 lb
34" x 5" x 34"- 54 lb

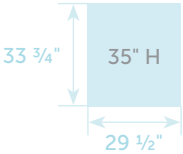

Cushions included

Item #	lbs	Zones	2	3	4	5	6	7	8
MI-Ch	65		86.00	91.00	95.00	103.00	110.00	118.00	128.00

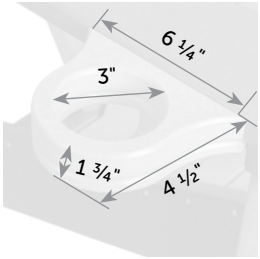

Cup Holder

CU

Catalog Pg. 49

Box

6" x 6" x 6"

Mission Right Sofa

MI-SoR *Catalog Pg. 49*

Item #	lbs	Zones	2	3	4	5	6	7	8
CU	2		15.00	15.00	16.00	16.00	17.00	17.00	18.00

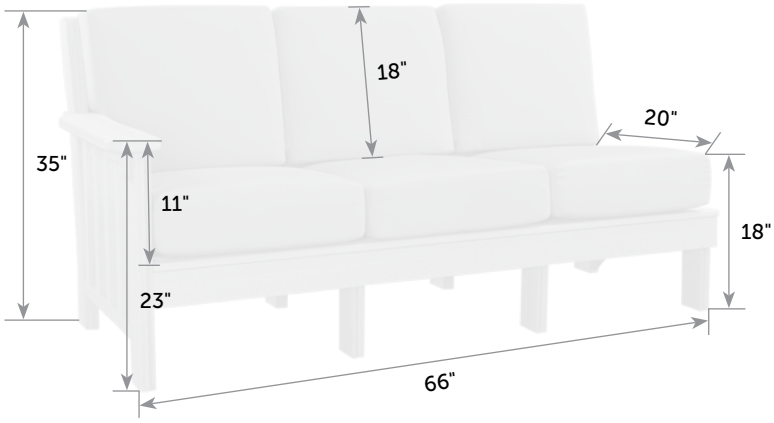

Mission Left Sofa

MI-SoL *Catalog Pg. 48*

Freight

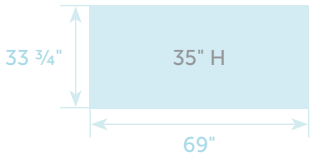

Cushions included

Item #	lbs	Zones	2	3	4	5	6	7	8
MI-SoL MI-SoR	120		189.00	198.00	206.00	220.00	236.00	253.00	270.00

Sectionals come standard with 7" seat cushions

Mission Right Love Seat

MI-LoR *Catalog Pg. 49*

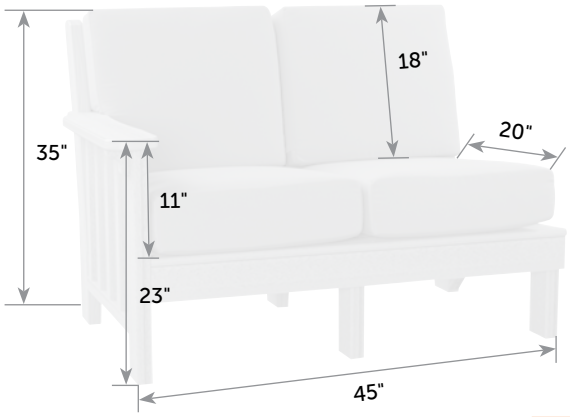

Mission Left Love Seat

MI-LoL *Catalog Pg. 48*

Freight

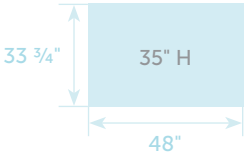

Item #	lbs	Zones	2	3	4	5	6	7	8
MI-LoL MI-LoR	95		129.00	135.00	139.00	149.00	165.00	179.00	195.00

Cushions included

Mission Right Chair

MI-ChR *Catalog Pg. 49*

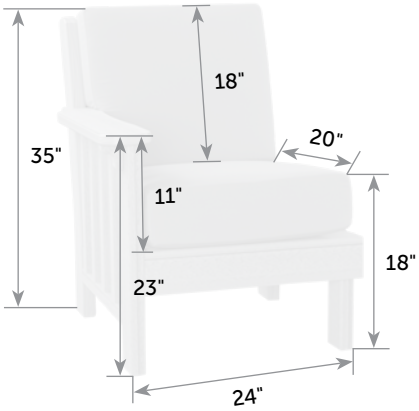

Mission Left Chair

MI-ChL *Catalog Pg. 48*

Freight

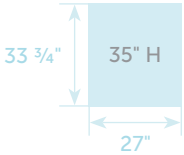

Item #	lbs	Zones	2	3	4	5	6	7	8
MI-ChL MI-ChR	55		86.00	91.00	95.00	103.00	110.00	118.00	128.00

Cushions included

Sectionals come standard with 7" seat cushions

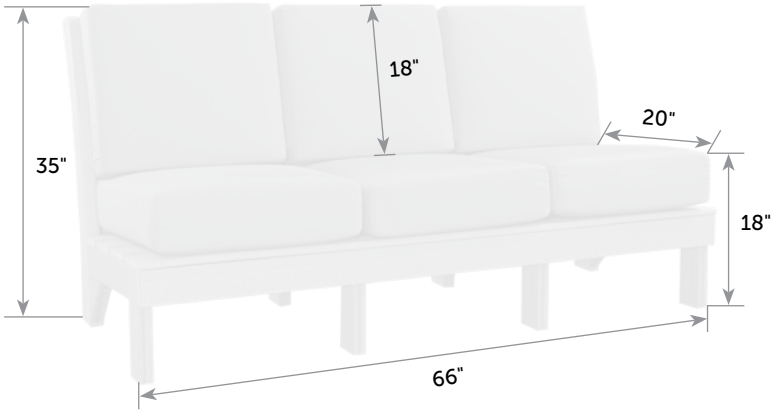

Mission Center Sofa

MI-SoC *Catalog Pg. 48*

Freight

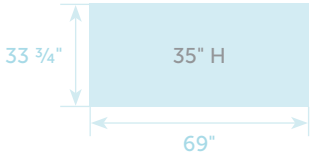

Cushions included

Item #	lbs	Zones	2	3	4	5	6	7	8
MI-SoC	120		189.00	198.00	206.00	220.00	236.00	253.00	270.00

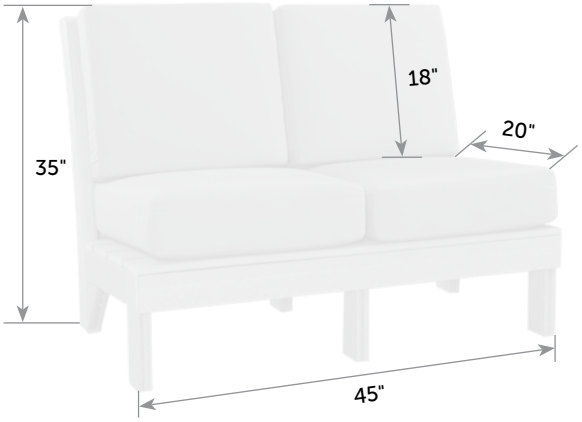

Mission Center Love Seat

MI-LoC *Catalog Pg. 48*

Freight

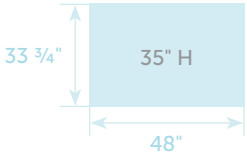

Cushions included

Item #	lbs	Zones	2	3	4	5	6	7	8
MI-LoC	85		129.00	135.00	139.00	149.00	165.00	179.00	195.00

Sectionals come standard with 7" seat cushions

Sectionals come standard with 7" seat cushions

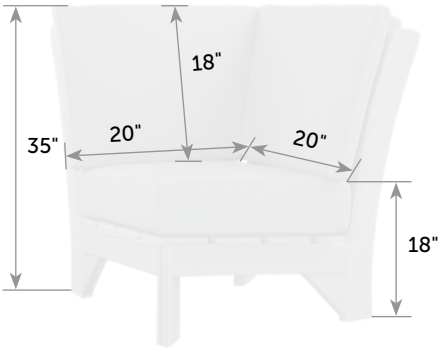

Mission Corner

MI-Co *Catalog Pg. 48*

Freight

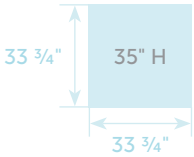

Cushions included

Item #	lbs	Zones	2	3	4	5	6	7	8
MI-Co	75		389.00	399.00	409.00	436.00	477.00	487.00	542.00

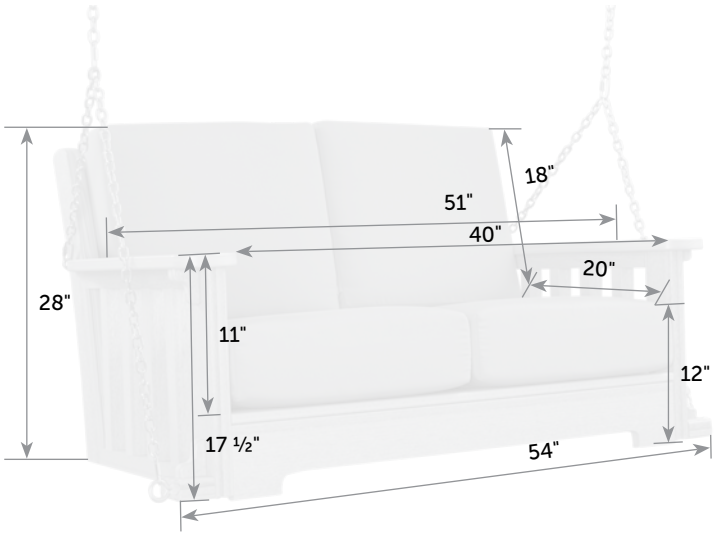

Mission Swing

MI-Sw *Catalog Pg. 49*

Freight

Cushions included

Item #	lbs	Zones	2	3	4	5	6	7	8
MI-Sw	95		389.00	399.00	409.00	436.00	477.00	487.00	542.00

Choice of 5" or 7" seat cushions

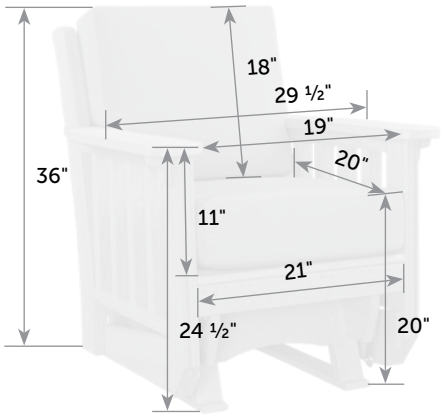

Mission Glider

MI-Gl

Catalog Pg. 49

Freight

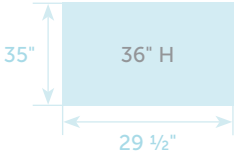

Cushions included

Item #	lbs	Zones	2	3	4	5	6	7	8
MI-Gl	80		389.00	389.00	389.00	406.00	477.00	477.00	532.00

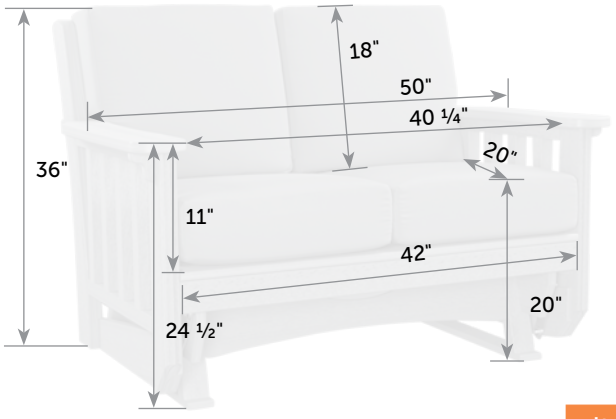

Mission Double Glider

MI-GlD

Catalog Pg. 49

Freight

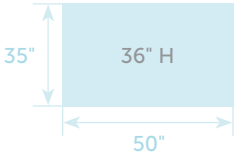

Cushions included

Item #	lbs	Zones	2	3	4	5	6	7	8
MI-GlD	125		389.00	389.00	389.00	406.00	477.00	477.00	532.00

Choice of 5" or 7" seat cushions

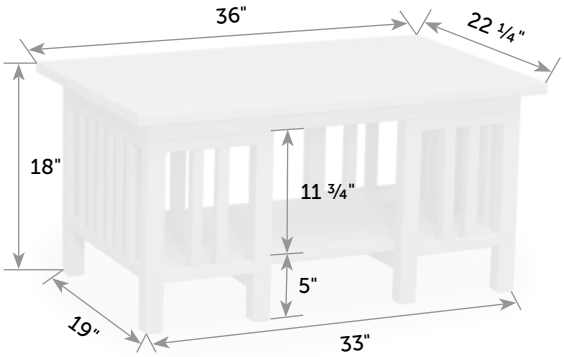

Mission Coffee Table

MI-TaC *Catalog Pg. 48*

Box

23" x 19" x 37"

Item #	lbs	Zones	2	3	4	5	6	7	8
MI-TaC	60		69.00	75.00	78.00	84.00	91.00	97.00	106.00

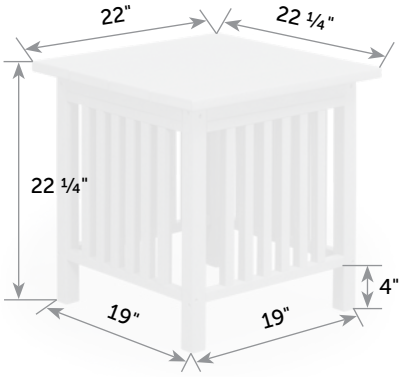

Mission Side Table

MI-TaS *Catalog Pg. 48*

Box

23" x 6" x 23"

Item #	lbs	Zones	2	3	4	5	6	7	8
MI-TaS	35		23.35	26.05	27.92	31.59	37.38	41.73	47.58

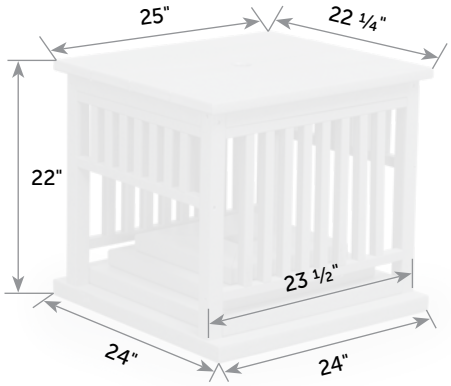

Mission Umbrella Stand

MI-TaU *Catalog Pg. 48*

Box
24" x 24" x 23"

Item #	lbs	Zones	2	3	4	5	6	7	8
MI-TaU	80		67.00	71.00	74.00	79.00	87.00	95.00	97.00

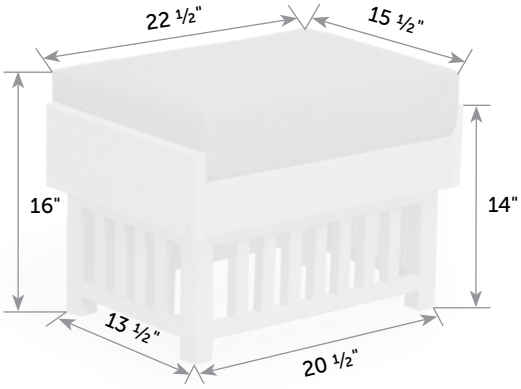

Cushions included

Mission Ottoman

MI-Ot *Catalog Pg. 49*

Box
16" x 16" x 23"

Item #	lbs	Zones	2	3	4	5	6	7	8
MI-Ot	25		25.37	28.09	29.82	33.26	38.92	43.16	49.34

Choice of 5" or 7" seat cushions

Van Buren

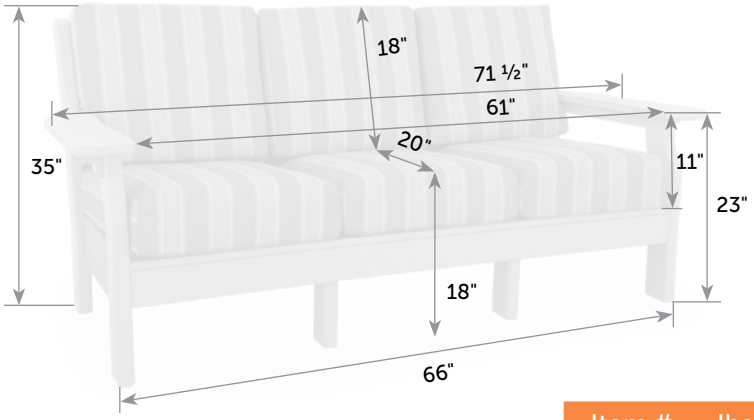

Van Buren Sofa

VA-So *Catalog Pg. 53*

5 Boxes

22" x 6" x 45"- 11 lb (x3)
17" x 6" x 73"- 70 lb
34" x 5" x 34"- 27 lb

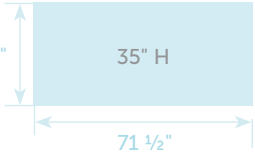

Cushions included

Item #	lbs	Zones	2	3	4	5	6	7	8
VA-So	130		189.00	198.00	206.00	220.00	236.00	253.00	270.00

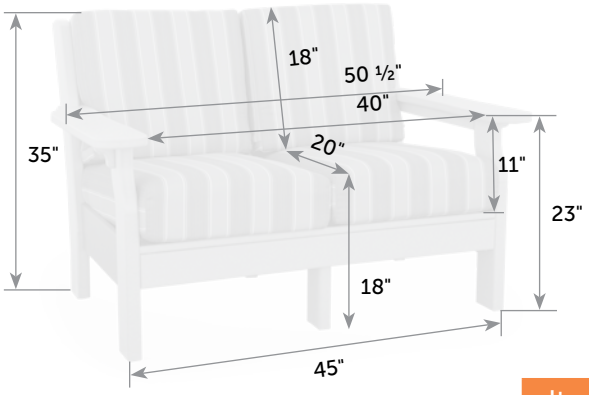

Van Buren Love Seat

VA-Lo *Catalog Pg. 53*

4 Boxes

22" x 6" x 45"- 11 lb (x2)
22" x 6" x 45"- 40 lb
34" x 5" x 34"- 33 lb

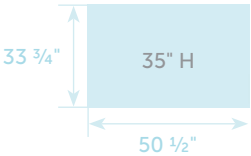

Cushions included

Item #	lbs	Zones	2	3	4	5	6	7	8
VA-Lo	95		129.00	135.00	139.00	149.00	165.00	179.00	195.00

Choice of 5" or 7" seat cushions

Choice of 5" or 7" seat cushions

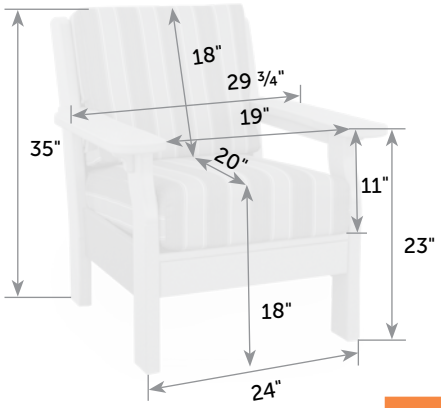

Van Buren Chair

VA-Ch

Catalog Pg. 53

2 Boxes

22" x 6" x 45"- 11 lb
34" x 5" x 34"- 49 lb

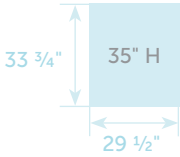

Cushions included

Item #	lbs	Zones	2	3	4	5	6	7	8
VA-Ch	55		86.00	91.00	95.00	103.00	110.00	118.00	128.00

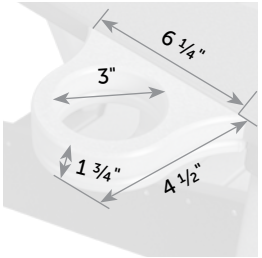

Cup Holder

CU

Catalog Pg. 55

Box

6" x 6" x 6"

Van Buren Right Sofa

VA-SoR

Catalog Pg. 55

Item #	lbs	Zones	2	3	4	5	6	7	8
CU	2		15.00	15.00	16.00	16.00	17.00	17.00	18.00

Van Buren Left Sofa

VA-SoL

Catalog Pg. 54

Freight

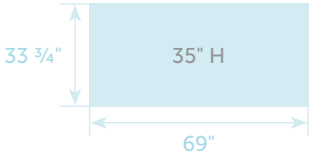

Cushions included

Item #	lbs	Zones	2	3	4	5	6	7	8
VA-SoL VA-SoR	125		189.00	198.00	206.00	220.00	236.00	253.00	270.00

Sectionals come standard with 7" seat cushions

Van Buren Right Love Seat

VA-LoR *Catalog Pg. 55*

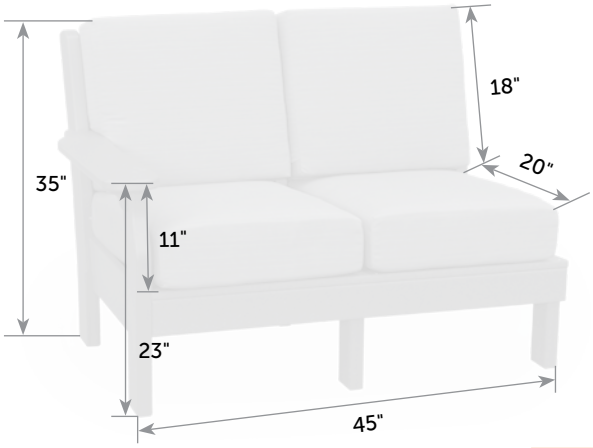

Van Buren Left Love Seat

VA-LoL *Catalog Pg. 54*

Freight

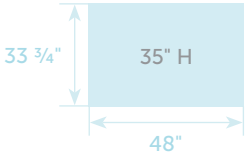

Item #	lbs	Zones	2	3	4	5	6	7	8
VA-LoL VA-LoR	90		129.00	135.00	139.00	149.00	165.00	179.00	195.00

Cushions included

Van Buren Right Chair

VA-ChR *Catalog Pg. 55*

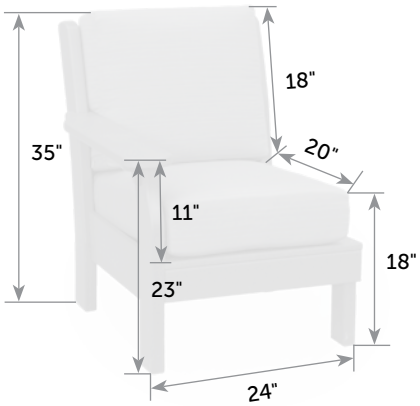

Van Buren Left Chair

VA-ChL *Catalog Pg. 54*

Freight

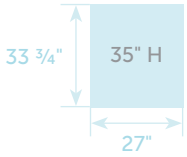

Item #	lbs	Zones	2	3	4	5	6	7	8
VA-ChL VA-ChR	50		86.00	91.00	95.00	103.00	110.00	118.00	128.00

Cushions included

Sectionals come standard with 7" seat cushions

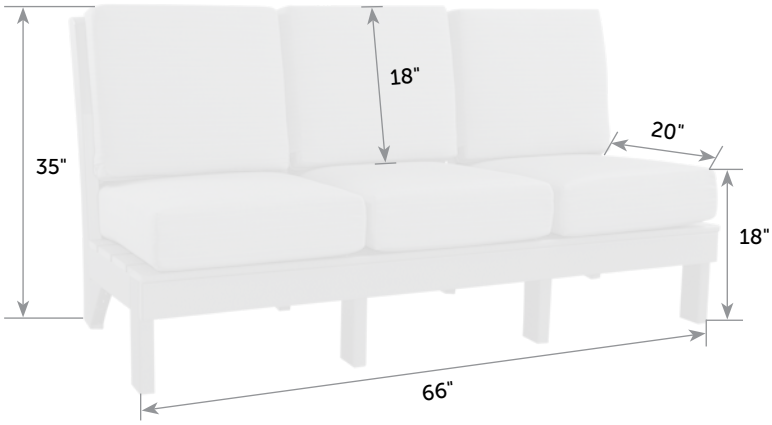

Van Buren Center Sofa

VA-SoC

Catalog Pg. 54

Freight

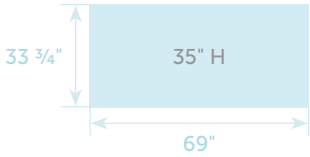

Cushions included

Item #	lbs	Zones	2	3	4	5	6	7	8
VA-SoC	120		189.00	198.00	206.00	220.00	236.00	253.00	270.00

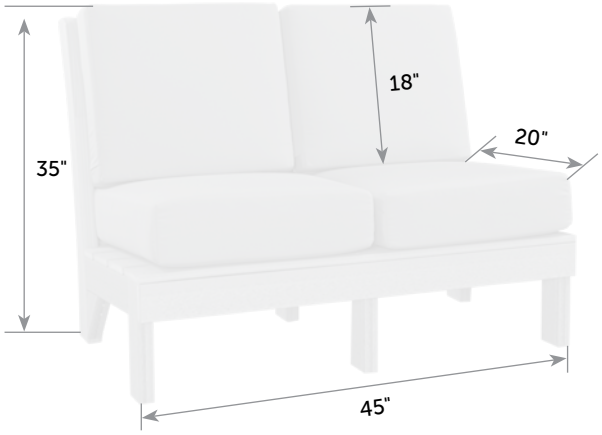

Van Buren Center Love Seat

VA-LoC

Catalog Pg. 54

Freight

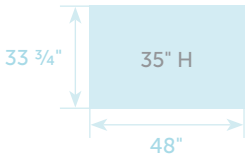

Cushions included

Item #	lbs	Zones	2	3	4	5	6	7	8
VA-LoC	85		129.00	135.00	139.00	149.00	165.00	179.00	195.00

Sectionals come standard with 7" seat cushions

Sectionals come standard with 7" seat cushions

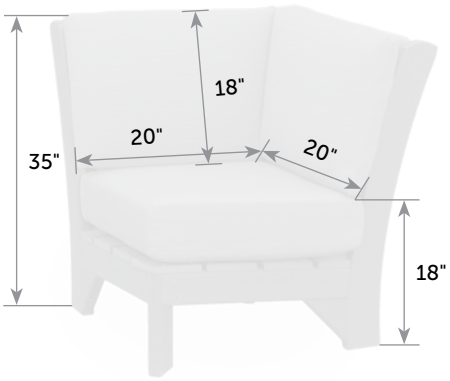

Van Buren Corner Section

VA-Co *Catalog Pg. 54*

Freight

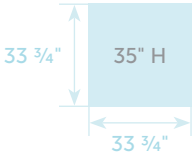

Cushions included

Item #	lbs	Zones	2	3	4	5	6	7	8
VA-Co	75		389.00	399.00	409.00	436.00	477.00	487.00	542.00

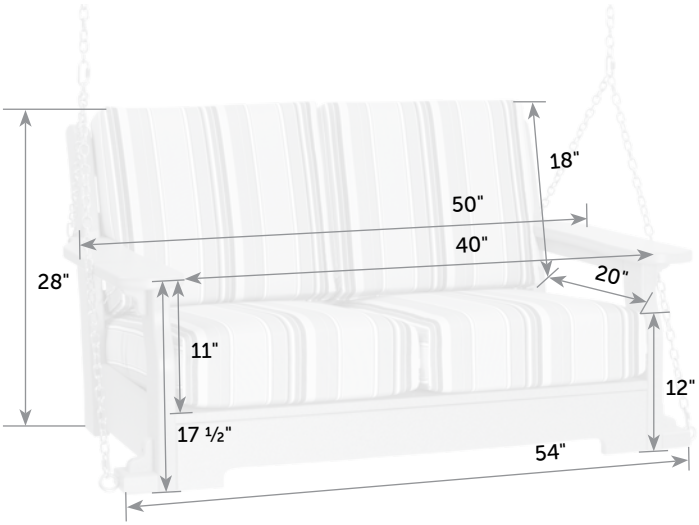

Van Buren Swing

VA-Sw *Catalog Pg. 55*

Freight

Cushions included

Item #	lbs	Zones	2	3	4	5	6	7	8
VA-Sw	85		389.00	399.00	409.00	436.00	477.00	487.00	542.00

Choice of 5" or 7" seat cushions

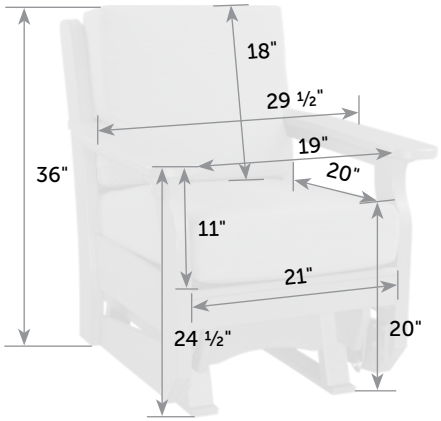

Van Buren Glider

VA-Gl

Catalog Pg. 55

Freight

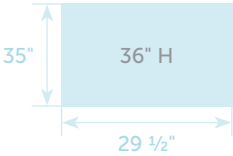

Cushions included

Item #	lbs	Zones	2	3	4	5	6	7	8
VA-Gl	70		389.00	389.00	389.00	406.00	477.00	477.00	532.00

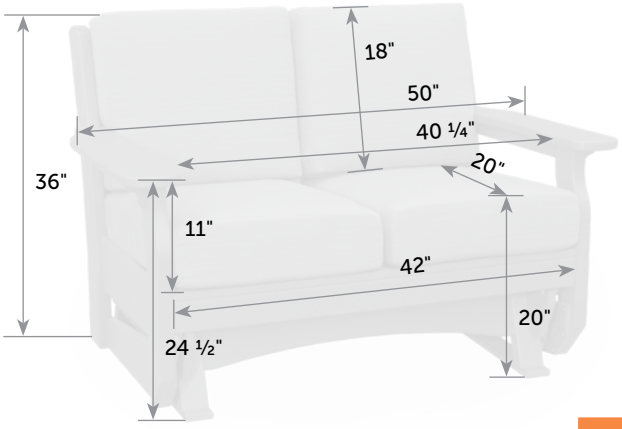

Van Buren Double Glider

VA-GlD

Catalog Pg. 55

Freight

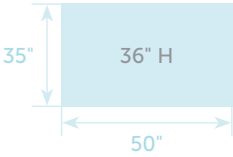

Cushions included

Item #	lbs	Zones	2	3	4	5	6	7	8
VA-GlD	115		389.00	389.00	389.00	406.00	477.00	477.00	532.00

Choice of 5" or 7" seat cushions

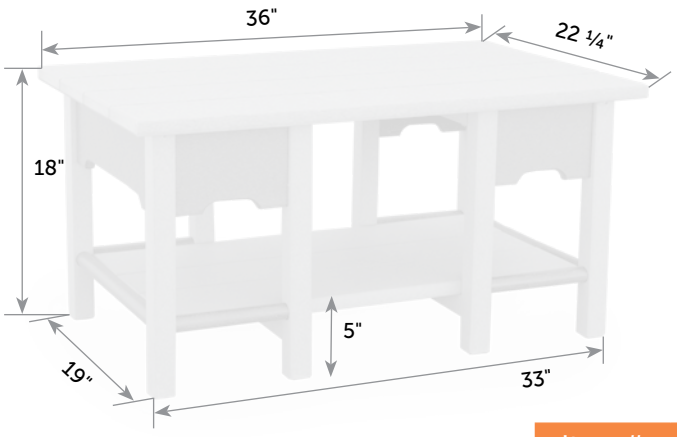

Van Buren Coffee Table

VA-TaC *Catalog Pg. 54*

Box

23" x 19" x 37"

Item #	lbs	Zones	2	3	4	5	6	7	8
VA-TaC	53		69.00	75.00	78.00	84.00	91.00	97.00	106.00

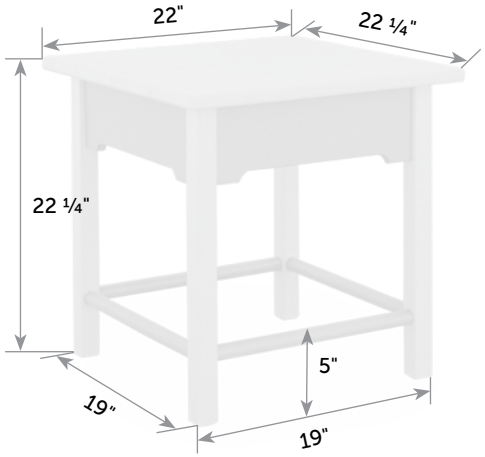

Van Buren Side Table

VA-TaS *Catalog Pg. 54*

Box

23" x 6" x 23"

Item #	lbs	Zones	2	3	4	5	6	7	8
VA-TaS	28		23.35	26.05	27.92	31.59	37.38	41.73	47.58

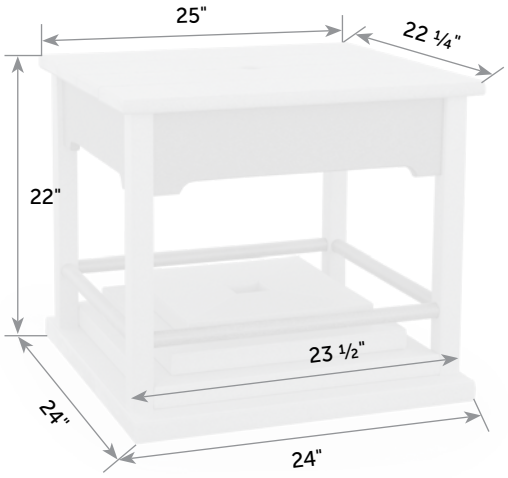

Van Buren Umbrella Stand

VA-TaU *Catalog Pg. 54*

Box

24" x 24" x 23"

Item #	lbs	Zones	2	3	4	5	6	7	8
VA-TaU	75		67.00	71.00	74.00	79.00	87.00	95.00	97.00

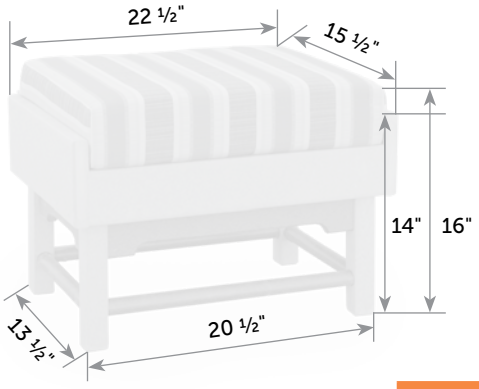

Cushions included

Van Buren Ottoman

VA-Ot *Catalog Pg. 55*

Box

16" x 16" x 23"

Item #	lbs	Zones	2	3	4	5	6	7	8
VA-Ot	20		25.37	28.09	29.82	33.26	38.92	43.16	49.34

Choice of 5" or 7" seat cushions

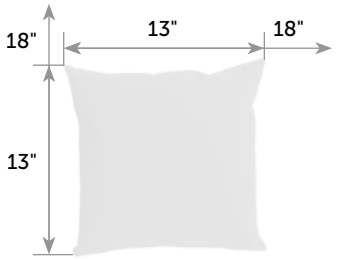

Pillow

Catalog Pg. 49, 55

Box

PI-13x13 23" x 6" x 23"
PI-18x18 23" x 6" x 23"

Item #	W x L	Lb.	Zones	2	3	4	5	6	7	8
PI-13x13	13" x 13"	1		24.00	25.00	26.00	26.00	27.00	27.00	28.00
PI-18x18	18" x 18"	1		24.00	25.00	26.00	26.00	27.00	27.00	28.00

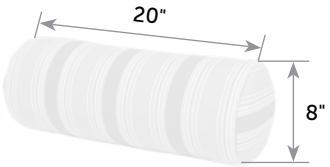

Cylinder Cushions

PI-Cy *Catalog Pg. 49, 55*

Box

8" x 8" x 20"

Item #	lbs	Zones	2	3	4	5	6	7	8
PI-Cy	1		22.00	23.00	24.00	24.00	25.00	25.00	26.00

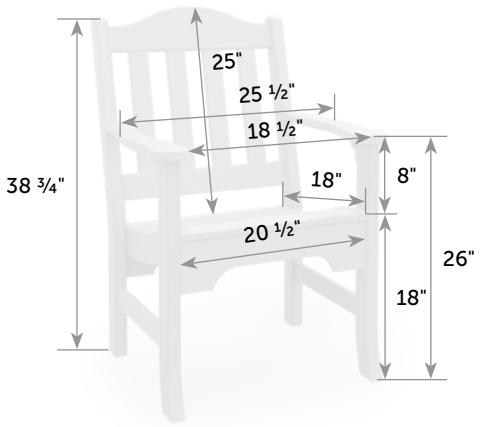

Avonlea Garden Chair

AV-Ch

Catalog Pg. 59

Box
25" x 9" x 42"

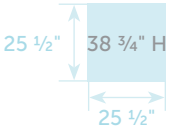

Item #	lbs	Zones	2	3	4	5	6	7	8
AV-Ch	35		31.13	35.29	38.97	45.64	51.78	58.64	66.92

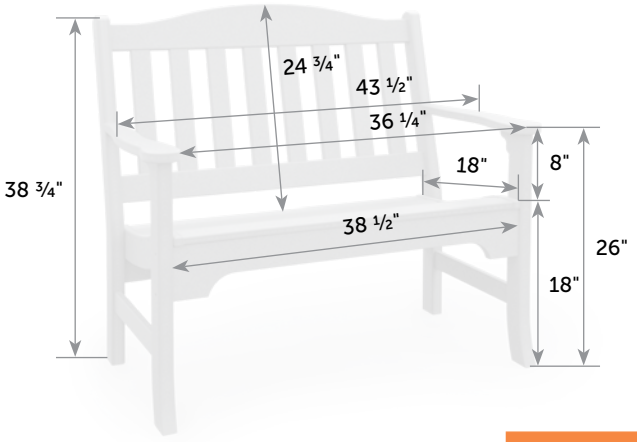

Avonlea Garden Bench

AV-Be

Catalog Pg. 59

Box
25" x 11" x 43"

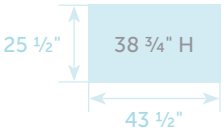

Item #	lbs	Zones	2	3	4	5	6	7	8
AV-Be	55		63.00	68.00	72.00	78.00	85.00	91.00	99.00

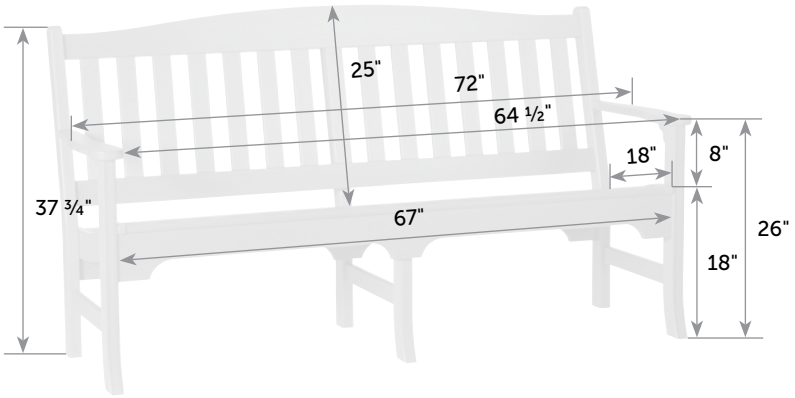

72" Avonlea Garden Bench

AV-Be-72 *Catalog Pg. 59*

Box

25" x 11" x 69"

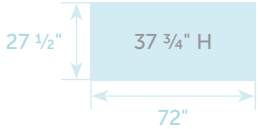

Item #	lbs	Zones	2	3	4	5	6	7	8
AV-Be-72	110		260.00	265.00	270.00	275.00	280.00	285.00	290.00

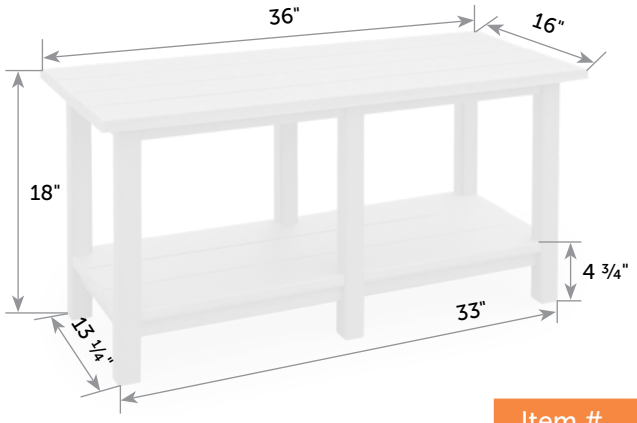

Avonlea Garden Coffee Table

AV-TaC *Catalog Pg. 59*

Box

17" x 19" x 37"

Item #	lbs	Zones	2	3	4	5	6	7	8
AV-TaC	30		29.92	34.86	37.26	44.51	50.68	57.54	65.99

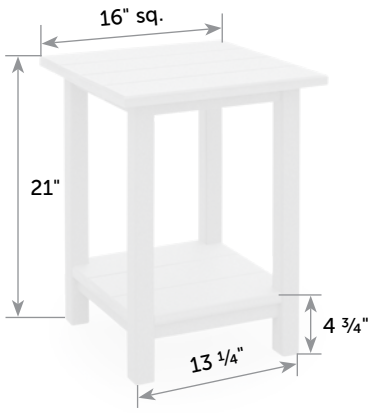

Avonlea Garden Side Table

AV-TaS *Catalog Pg. 59*

Box

16" x 16" x 23"

Item #	lbs	Zones	2	3	4	5	6	7	8
AV-TaS	12		22.37	25.10	26.83	30.27	35.93	40.17	46.34

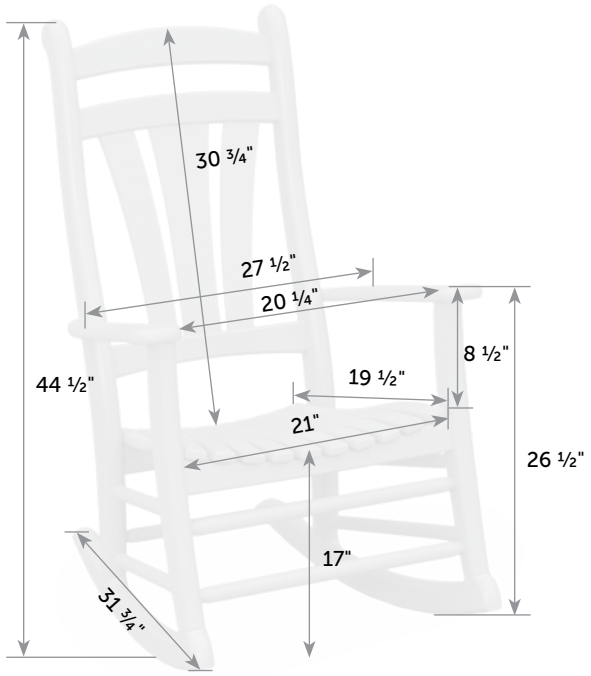

High Tide Rocker

HI-Ro *Catalog Pg. 63*

Box
22" x 6" x 45"

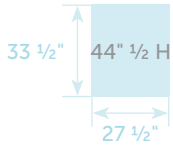

Item #	lbs	Zones	2	3	4	5	6	7	8
HI-Ro	35		33.31	38.61	42.12	48.38	55.13	61.09	69.81

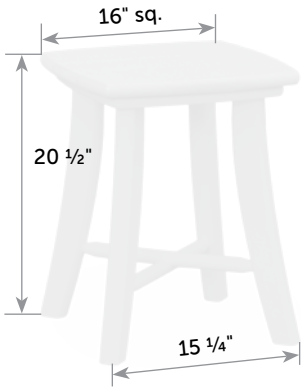

High Tide Side Table

HI-TaS *Catalog Pg. 63*

Box
16" x 16" x 23"

Item #	lbs	Zones	2	3	4	5	6	7	8
HI-TaS	15		22.37	25.10	26.83	30.27	35.93	40.17	46.34

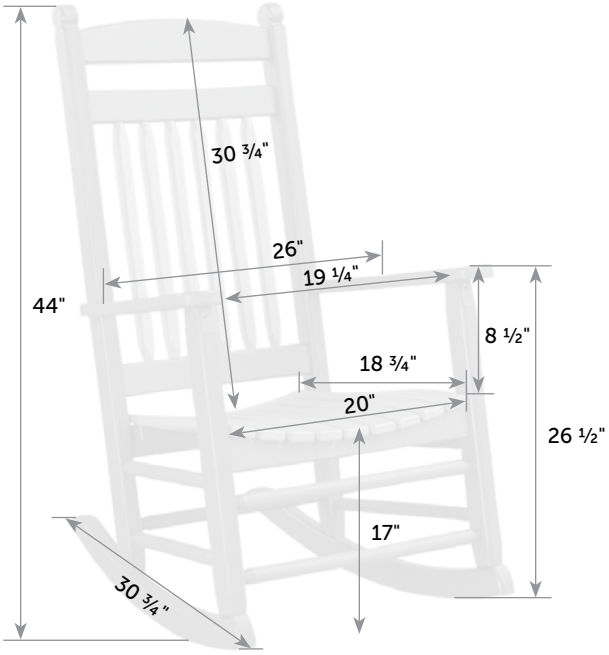

Zinn's Mill Rocker

ZI-Ro *Catalog Pg. 65*

Box

22" x 6" x 45"

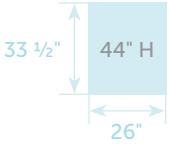

Item #	lbs	Zones	2	3	4	5	6	7	8
ZI-Ro	35		33.31	38.61	42.12	48.38	55.13	61.09	69.81

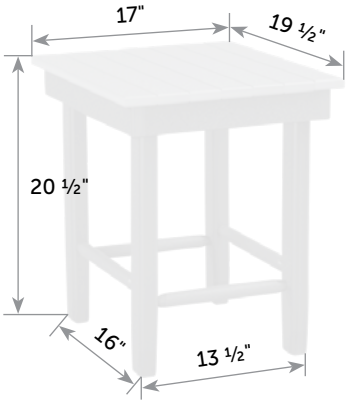

Zinn's Mill Side Table

ZI-TaS *Catalog Pg. 65*

Box

22" x 6" x 22"

Item #	lbs	Zones	2	3	4	5	6	7	8
ZI-TaS	15		22.37	25.10	26.83	30.27	35.93	40.17	46.34

SummerSide Bar

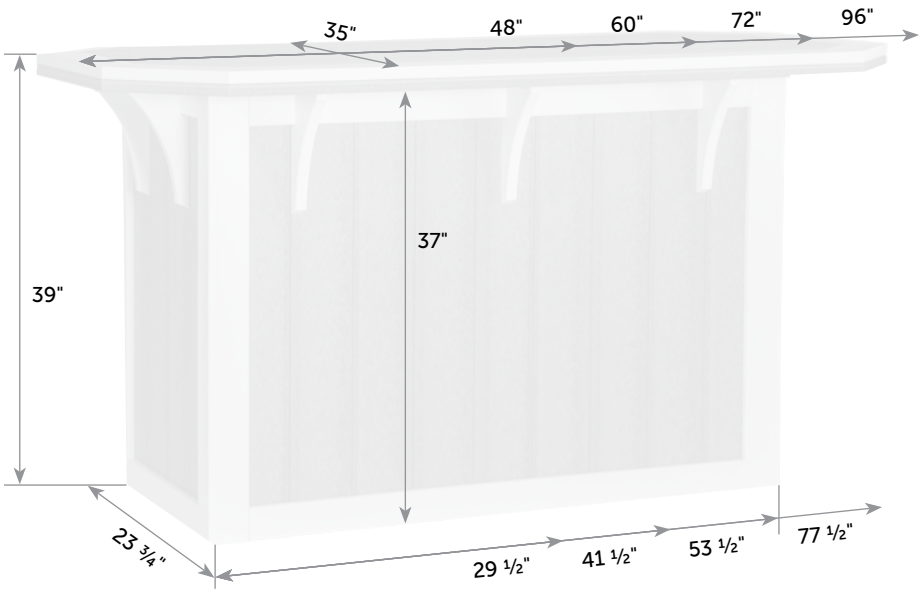

Removable top for easy handling.

SummerSide Bar

Catalog Pg. 67

Freight

Item #	W x L	Lb.	Zones	2	3	4	5	6	7	8
SU-Ba-35x48	35" x 48"	205		389.00	429.00	469.00	509.00	549.00	589.00	629.00
SU-Ba-35x60	35" x 60"	235		379.00	429.00	479.00	529.00	529.00	629.00	679.00
SU-Ba-35x72	35" x 72"	275		369.00	435.00	499.00	565.00	629.00	695.00	759.00
SU-Ba-35x96	35" x 96"	410		349.00	439.00	529.00	619.00	709.00	799.00	889.00

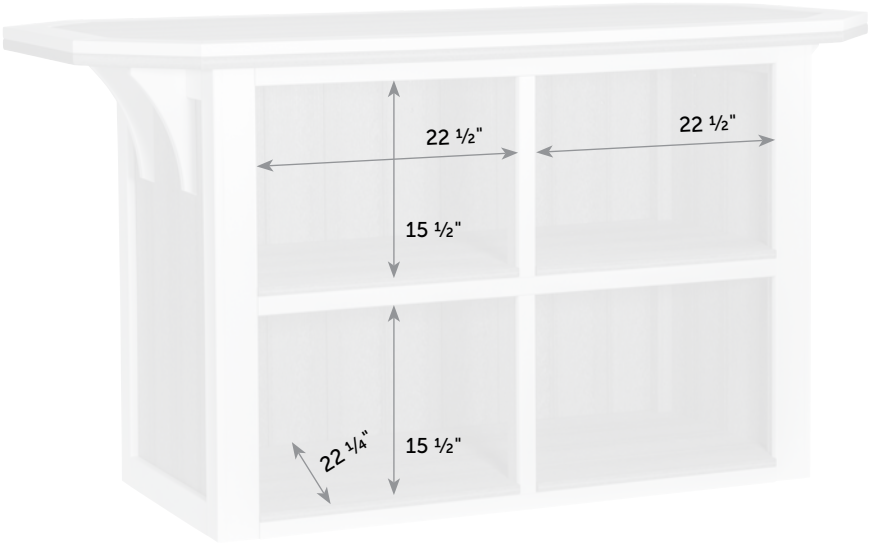

Width of shelf opening will change with size. 35" x 72" is shown. 48" and 60" do not have center support.

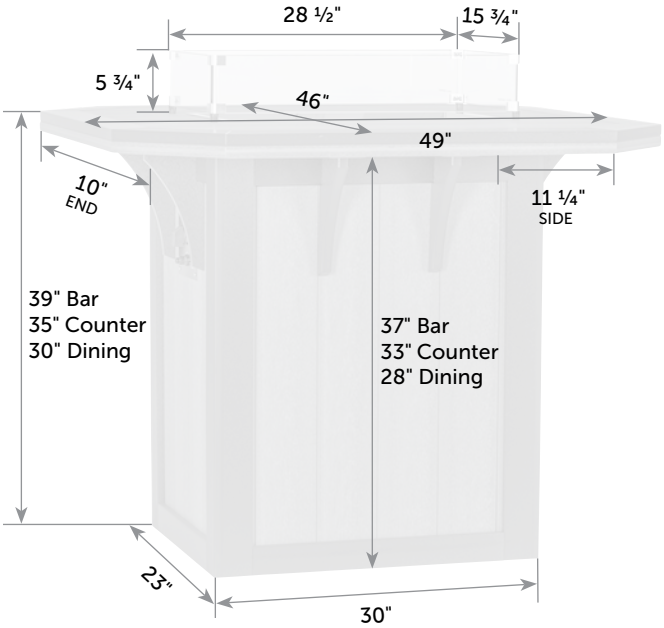

Removable top for easy handling.

46" x 48" SummerSide Fire Table

Catalog Pg. 69

Freight

Item #	Lb.	Zones	2	3	4	5	6	7	8
SU-TaF-Di-46x48	236		389.00	435.00	495.00	539.00	585.00	629.00	679.00
SU-TaF-Co-46x48	246		389.00	435.00	495.00	539.00	585.00	629.00	679.00
SU-TaF-Ba-46x48	256		389.00	435.00	495.00	539.00	585.00	629.00	679.00

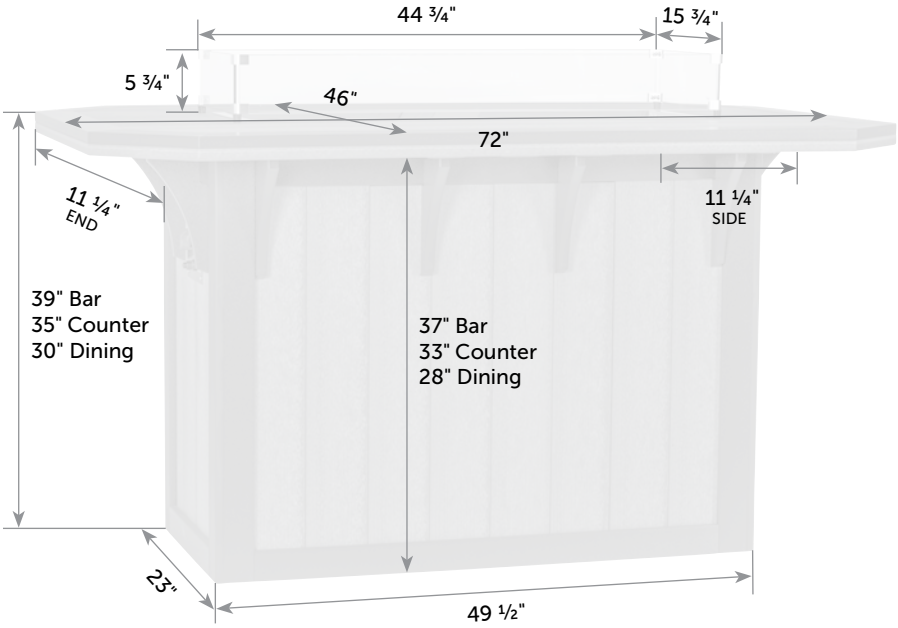

Removable top for easy handling.

46" x 72" SummerSide Fire Table

Catalog Pg. 69

Freight

Item #	Lb.	Zones	2	3	4	5	6	7	8
SU-TaF-Di-46x72	280		389.00	459.00	535.00	599.00	665.00	715.00	785.00
SU-TaF-Co-46x72	290		389.00	459.00	535.00	599.00	665.00	715.00	785.00
SU-TaF-Ba-46x72	300		389.00	459.00	535.00	599.00	665.00	715.00	785.00

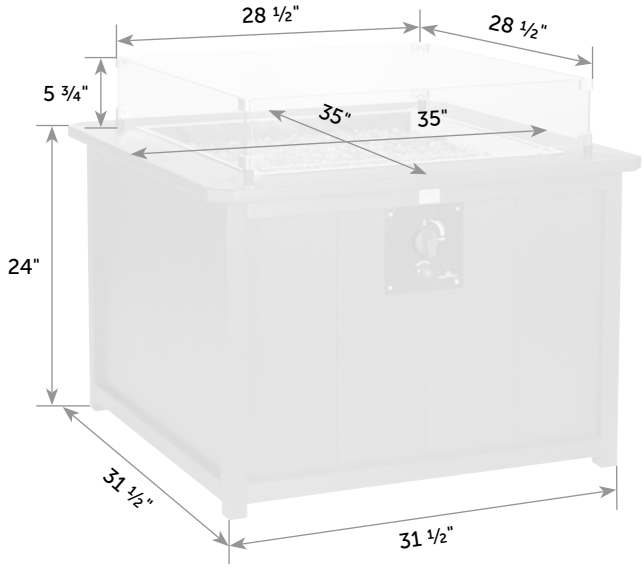

35" SeaAira Fire Pit

SE-Fi-35x35 *Catalog Pg. 71*

Freight

Item #	lbs	Zones	2	3	4	5	6	7	8
SE-Fi-35x35	125		389.00	389.00	389.00	406.00	437.00	437.00	492.00

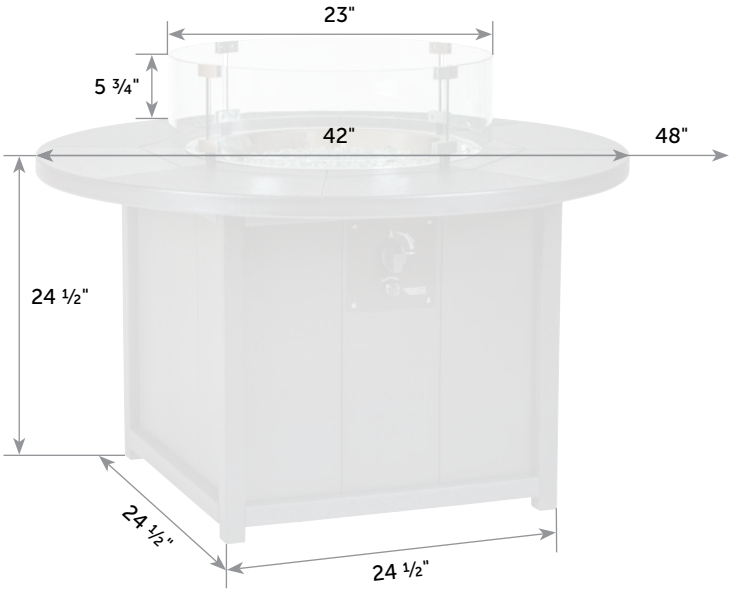

Removable top for easy handling.

SeaAira Round Fire Pit

Catalog Pg. 71

Freight

Item #	lbs	Zones	2	3	4	5	6	7	8
SE-Fi-42r	130		389.00	399.00	419.00	436.00	477.00	497.00	552.00
SE-Fi-48r	150		389.00	409.00	439.00	456.00	487.00	507.00	563.00

Round Fire Table

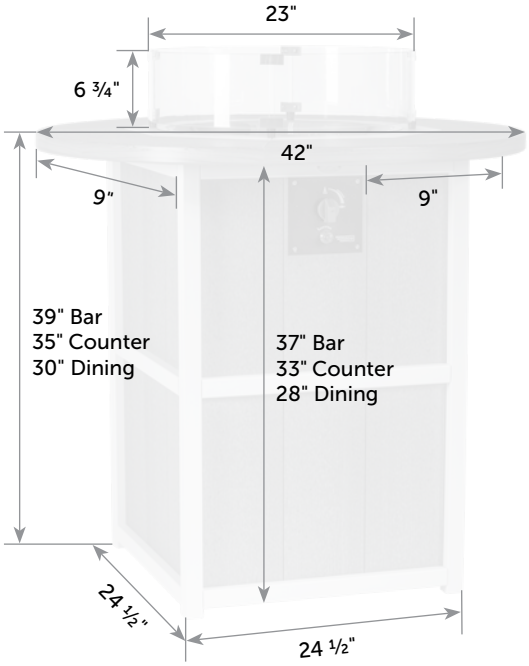

Removable top for easy handling.

SummerSide Round Fire Table

Catalog Pg. 73

Freight

Item #	Lb.	Zones	2	3	4	5	6	7	8
SU-TaF-Di-42r	140		389.00	429.00	469.00	495.00	549.00	559.00	635.00
SU-TaF-Co-42r	150		389.00	429.00	469.00	495.00	549.00	559.00	635.00
SU-TaF-Ba-42r	160		389.00	429.00	469.00	495.00	549.00	559.00	635.00
SU-TaF-Di-48r	160		389.00	439.00	489.00	515.00	569.00	579.00	655.00
SU-TaF-Co-48r	170		389.00	439.00	489.00	515.00	569.00	579.00	655.00
SU-TaF-Ba-48r	180		389.00	439.00	489.00	515.00	569.00	579.00	655.00

Clear
(standard)

Black

Amber

Aquamarine

Ruby

Glass guard and fabric cover included.

Easily connect your 20 lb propane tank or direct propane line. Orifice included for natural gas hookup.

ICE TRAY DIMENSIONS:
23 ½" square and 5 ½" deep

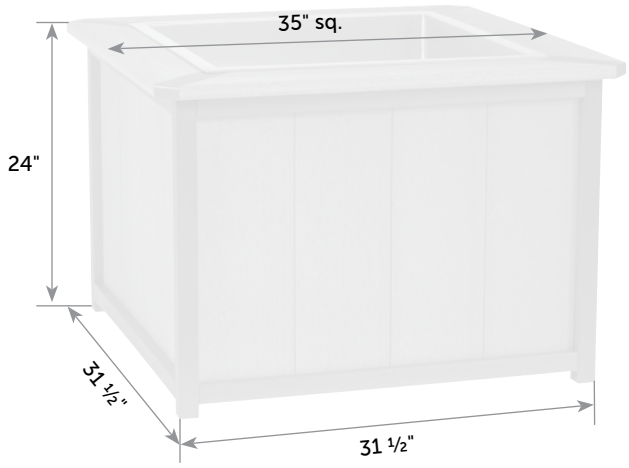

35" SeaAira Ice Pit

SE-Ic-35x35 *Catalog Pg. 75*

Freight

Item #	lbs	Zones	2	3	4	5	6	7	8
SE-Ic-35x35	125		389.00	389.00	389.00	406.00	437.00	437.00	492.00

ICE TRAY DIMENSIONS:
40 ¼" long, 11" wide and 5 ½" deep

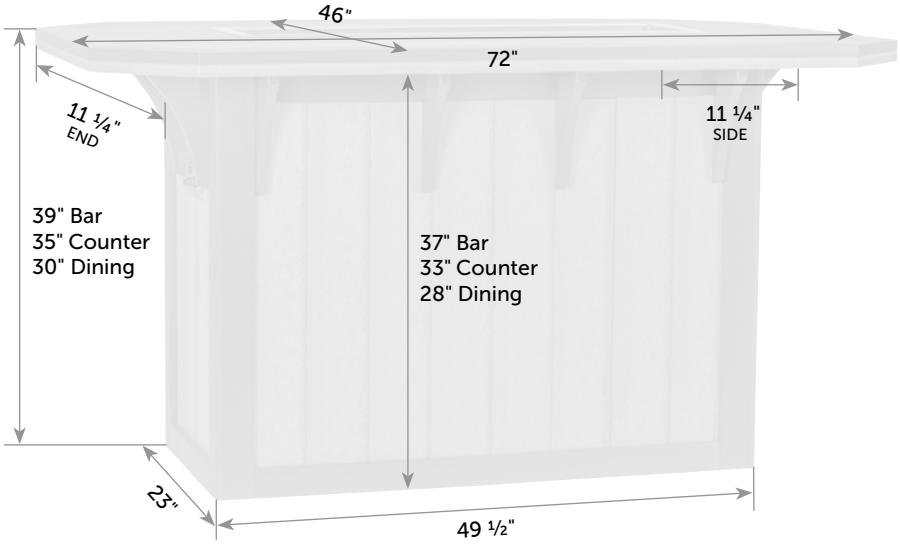

Removable top for easy handling.

46" x 72" SummerSide Ice Table

Catalog Pg. 77

Freight

Item #	Lb.	Zones	2	3	4	5	6	7	8
SU-Tal-Di-46x72	280		389.00	459.00	535.00	599.00	665.00	715.00	785.00
SU-Tal-Co-46x72	290		389.00	459.00	535.00	599.00	665.00	715.00	785.00
SU-Tal-Ba-46x72	300		389.00	459.00	535.00	599.00	665.00	715.00	785.00

Ice Tables/Pit

Whether entertaining on a large or small scale, the ice pits have you covered with the perfect space for drinks or an all-out seafood bar! But that's just the beginning.

Easily drain your ice pit by lifting the drain plug located in the center of your pit.

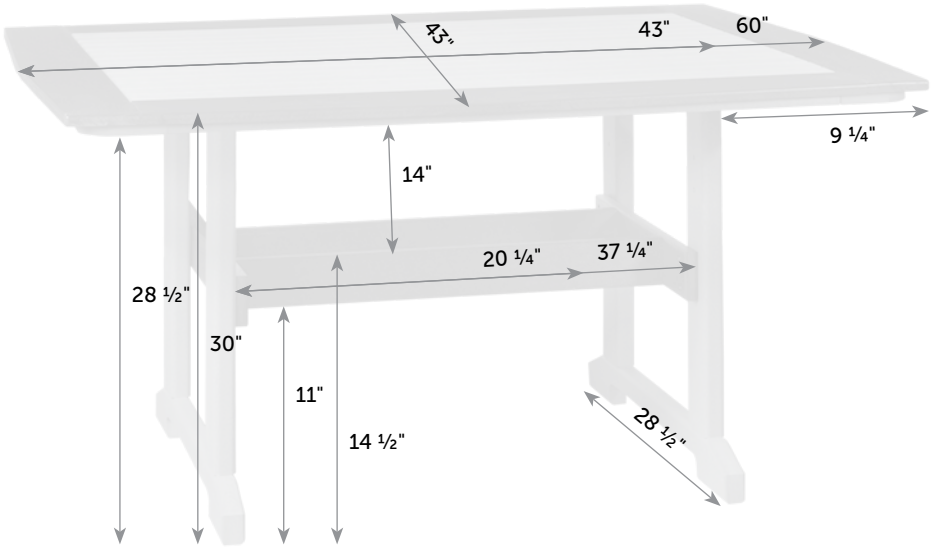

Great Bay Dining Table

Catalog Pg. 81

GR-Ta-Di-43x43

2 Boxes

43" x 4" x 43"- 80 lb
22" x 7" x 22"- 25 lb

GR-Ta-Di-43x60

Freight

Item #	W x L	Lb.	Zones	2	3	4	5	6	7	8
GR-Ta-Di-43x43	43" x 43"	105		264.00	265.00	267.00	270.00	277.00	284.00	291.00
GR-Ta-Di-43x60	43" x 60"	110		389.00	389.00	389.00	399.00	399.00	409.00	409.00

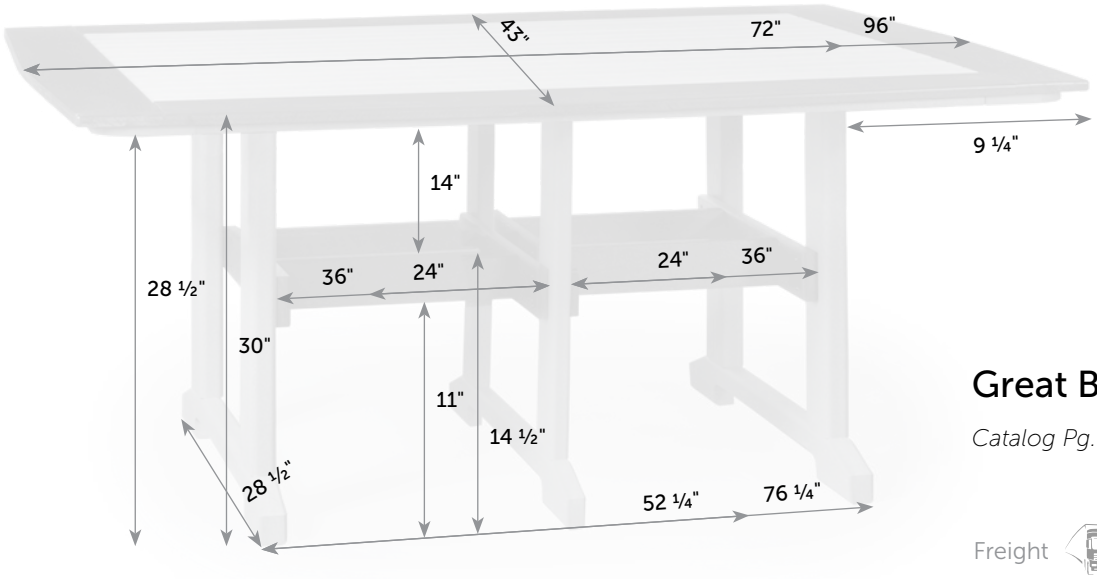

Great Bay Dining Table

Catalog Pg. 81

Freight

Item #	W x L	Lb.	Zones	2	3	4	5	6	7	8
GR-Ta-Di-43x72	43" x 72"	145		389.00	389.00	389.00	389.00	389.00	409.00	426.80
GR-Ta-Di-43x96	43" x 96"	160		389.00	389.00	389.00	389.00	426.80	426.80	479.00

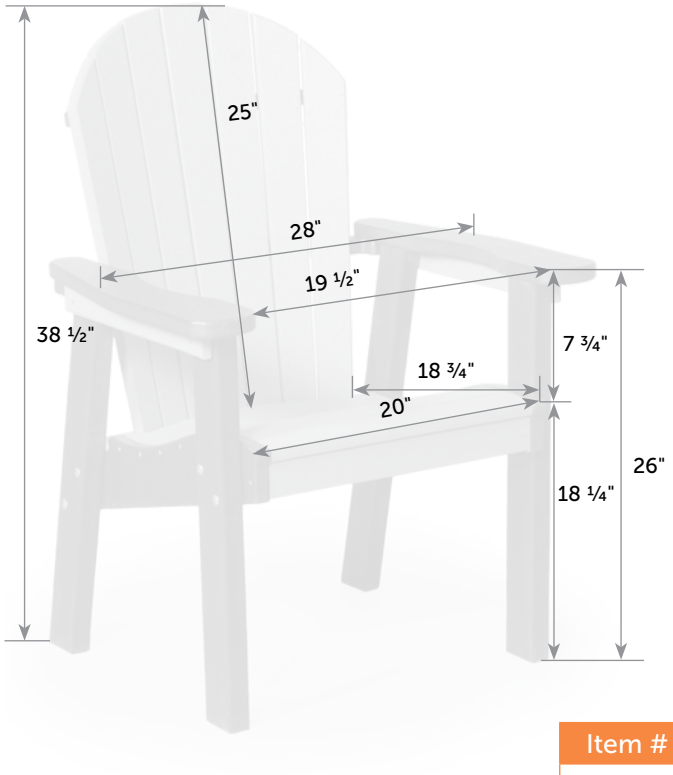

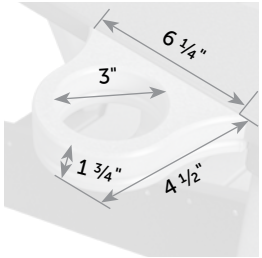

Cup Holder

CU

Box 6" x 6" x 6"

Catalog Pg. 81

Great Bay Dining Chair

GR-Ch-Di *Catalog Pg. 80*

Box 25" x 7" x 46"

26 ¼" 38 ½" H 28"

Item #	lbs	Zones	2	3	4	5	6	7	8
GR-Ch-Di	40		31.13	35.29	38.97	45.64	51.78	58.64	66.92
CU	2		15.00	15.00	16.00	16.00	17.00	17.00	18.00
GR-At	5		24.00	25.00	26.00	27.00	27.00	28.00	28.00

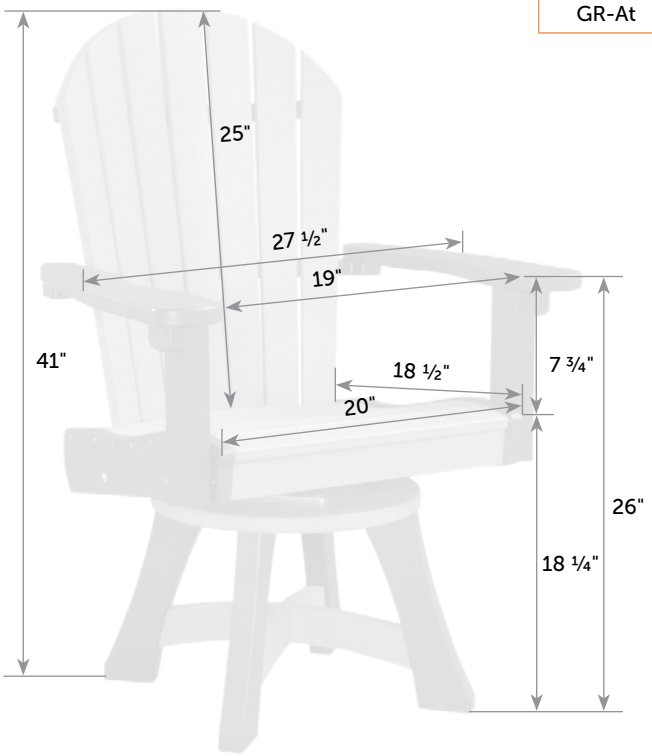

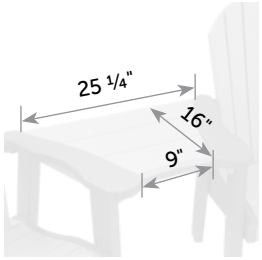

Great Bay Table Attachment

GR-At

Box 22" x 6" x 22"

Catalog Pg. 81

Table attaches easily with 4 thumb-screws.

Great Bay Swivel Dining Chair

GR-ChS-Di *Catalog Pg. 80*

Freight

26 ¼" 39 ½" H 27 ½"

Item #	lbs	Zones	2	3	4	5	6	7	8
GR-ChS-Di	55		389.00	389.00	389.00	409.00	429.00	429.00	449.00

Seat Cushion for Great Bay Dining Chair

GR-Cu-Di *Catalog Pg. 80*

Box

22" x 6" x 22"

Item #	lbs	Zones	2	3	4	5	6	7	8
GR-Cu-Di	3		22.00	23.00	24.00	24.00	25.00	25.00	26.00

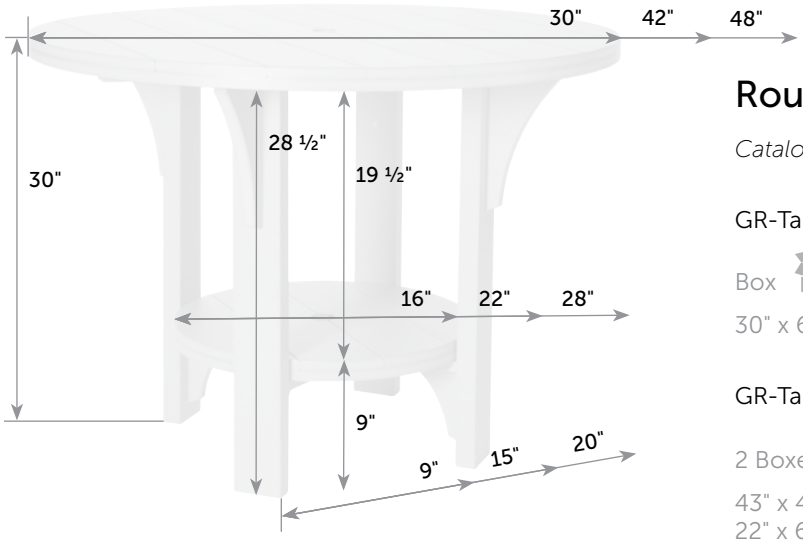

Round Dining Table

Catalog Pg. 81

GR-Ta-Di-30r

Box

30" x 6" x 39"- 55 lb

GR-Ta-Di-42r

2 Boxes

43" x 4" x 43"- 55 lb
22" x 6" x 45"- 25 lb

GR-Ta-Di-48r

2 Boxes

48" x 4" x 48"- 70 lb
22" x 6" x 45"- 30 lb

Item #	W x L	Lb.	Zones	2	3	4	5	6	7	8
GR-Ta-Di-30r	30" x 30"	55		58.00	64.00	67.00	73.00	80.00	86.00	95.00
GR-Ta-Di-42r	42" x 42"	80		260.00	265.00	270.00	275.00	280.00	285.00	290.00
GR-Ta-Di-48r	48" x 48"	100		260.00	265.00	270.00	275.00	280.00	285.00	290.00

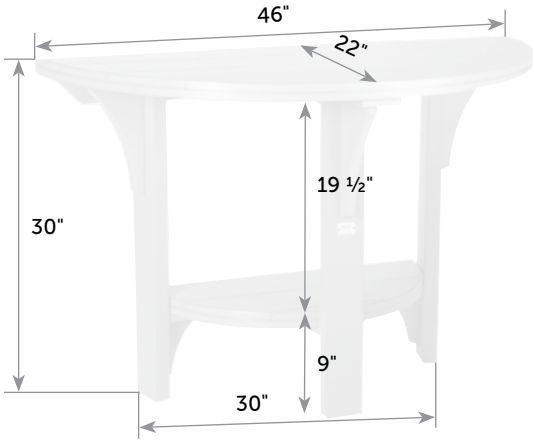

46" ½ Round Dining Table

GR-Ta-Di-46hr *Catalog Pg. 81*

Box
25" x 7" x 46"

Item #	lbs	Zones	2	3	4	5	6	7	8
GR-Ta-Di-46hr	55		62.00	66.00	70.00	77.00	82.00	90.00	98.00

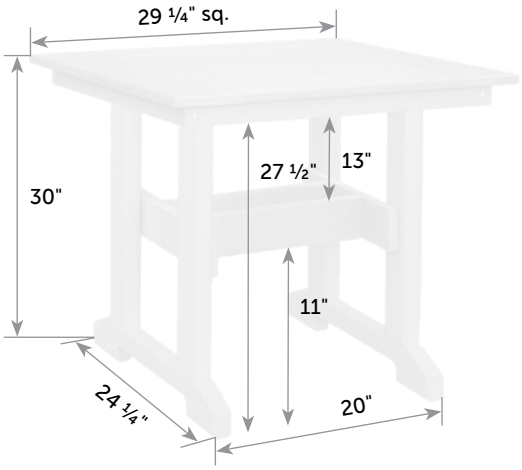

29" Square Dining Table

GR-Ta-Di-29x29 *Catalog Pg. 81*

Box
30" x 6" x 39"

Item #	lbs	Zones	2	3	4	5	6	7	8
GR-Ta-Di-29x29	65		65.00	69.00	73.00	80.00	86.00	93.00	101.00

Great Bay Counter

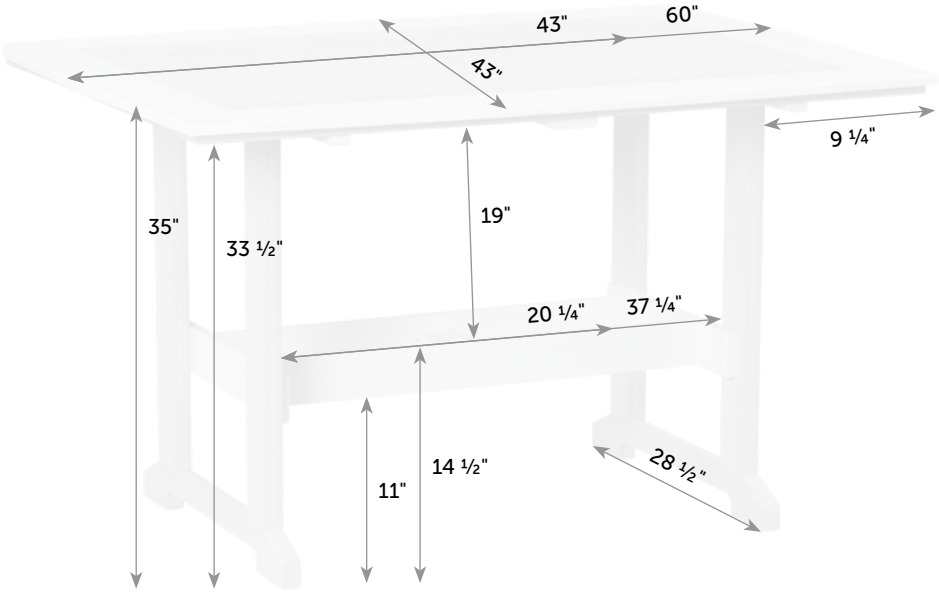

Great Bay Counter Table

Catalog Pg. 85

GR-Ta-Co-43x43

2 Boxes

43" x 4" x 43"- 80 lb
22" x 7" x 22"- 25 lb

GR-Ta-Co-43x60

Freight

Item #	W x L	Lb.	Zones	2	3	4	5	6	7	8
GR-Ta-Co-43x43	43" x 43"	108		264.00	265.00	267.00	270.00	277.00	284.00	291.00
GR-Ta-Co-43x60	43" x 60"	113		389.00	389.00	389.00	399.00	399.00	409.00	409.00

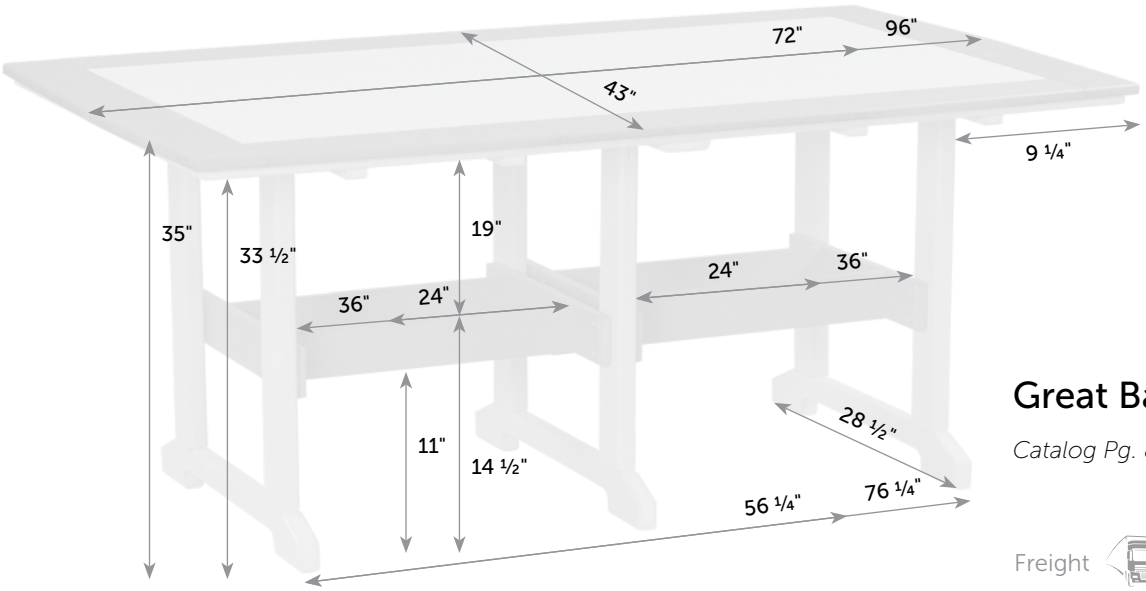

Great Bay Counter Table

Catalog Pg. 85

Freight

Item #	W x L	Lb.	Zones	2	3	4	5	6	7	8
GR-Ta-Co-43x72	43" x 72"	148		389.00	389.00	389.00	389.00	389.00	409.00	426.80
GR-Ta-Co-43x96	43" x 96"	163		389.00	389.00	389.00	389.00	426.80	426.80	479.00

Great Bay Counter

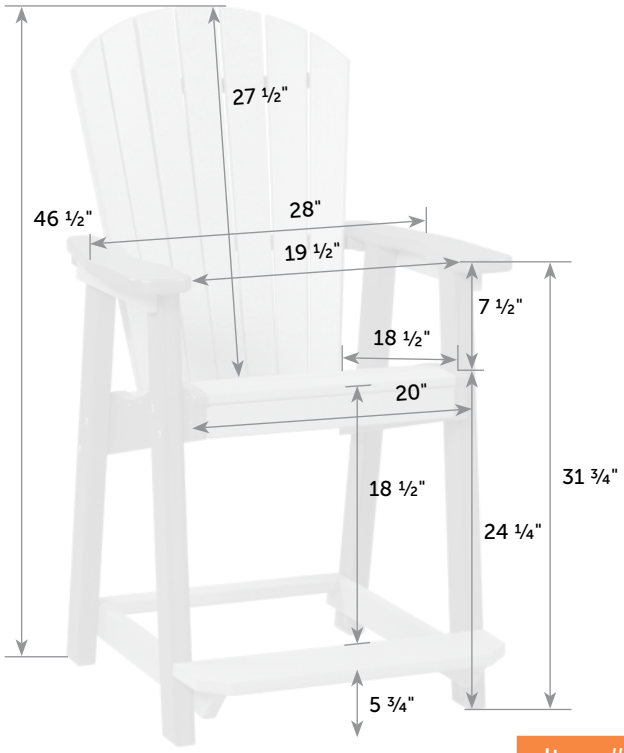

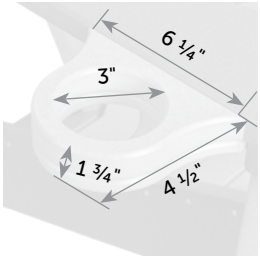

Cup Holder

CU

Catalog Pg. 85

Box 6"x6"x6"

Great Bay Counter Chair

GR-Ch-Co *Catalog Pg. 84*

Box 25" x 11" x 43"

33 ½" 46 ½" H 28"

Item #	lbs	Zones	2	3	4	5	6	7	8
GR-Ch-Co	50		36.00	42.00	45.00	51.00	58.00	64.00	73.00
CU	2		15.00	15.00	16.00	16.00	17.00	17.00	18.00
GR-At	5		24.00	25.00	26.00	27.00	27.00	28.00	28.00

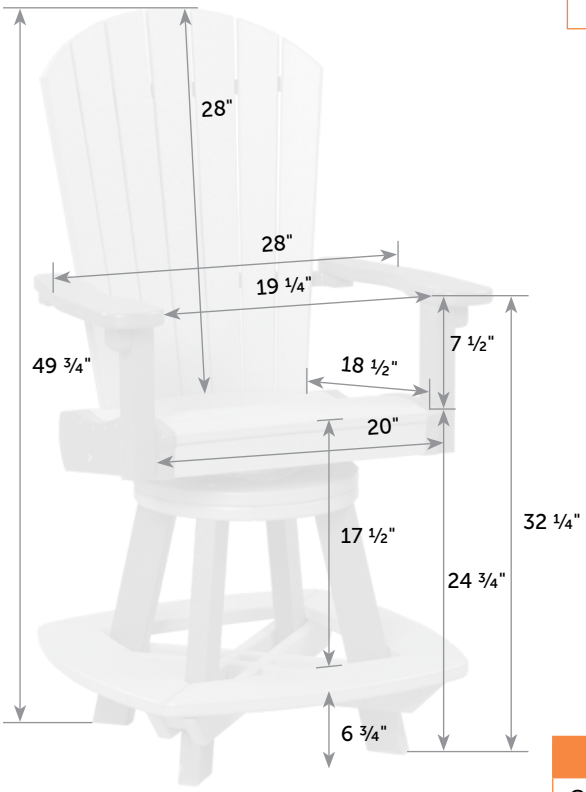

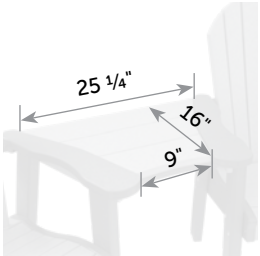

Table Attachment

GR-At

Catalog Pg. 85

Box 22" x 6" x 22"

Table attaches easily with 4 thumb-screws.

Great Bay Swivel Counter Chair

GR-ChS-Co *Catalog Pg. 84*

Freight

29 ½" 49 ¾" H 28"

Item #	lbs	Zones	2	3	4	5	6	7	8
GR-ChS-Co	70		389.00	399.00	409.00	436.00	467.00	497.00	527.00

Seat Cushion for Great Bay Counter Chair

GR-Cu-Co *Catalog Pg. 84*

Box
22" x 6" x 22"

Item #	lbs	Zones	2	3	4	5	6	7	8
GR-Cu-Co	3		22.00	23.00	24.00	24.00	25.00	25.00	26.00

Seat Cushion for Great Bay Stool

GR-Cu-St *Catalog Pg. 85*

Box
18" x 18" x 4"

Item #	lbs	Zones	2	3	4	5	6	7	8
GR-Cu-St	2		22.00	23.00	24.00	24.00	25.00	25.00	26.00

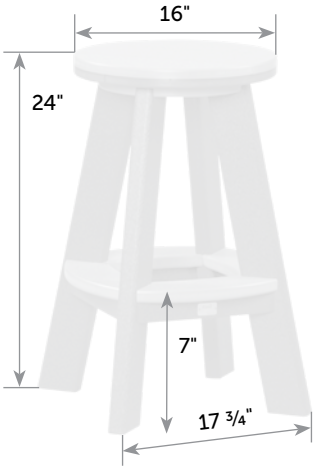

Great Bay Counter Stool

GR-St-Co *Catalog Pg. 85*

Box

18" x 18" x 25"

Item #	lbs	Zones	2	3	4	5	6	7	8
GR-St-Co	30		29.87	33.99	37.63	44.32	50.34	57.31	65.49

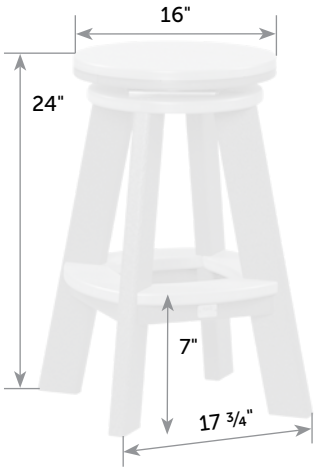

Great Bay Swivel Counter Stool

GR-StS-Co *Catalog Pg. 85*

Box

18" x 18" x 25"

Item #	lbs	Zones	2	3	4	5	6	7	8
GR-StS-Co	35		29.87	33.99	37.63	44.32	50.34	57.31	65.49

Great Bay Counter

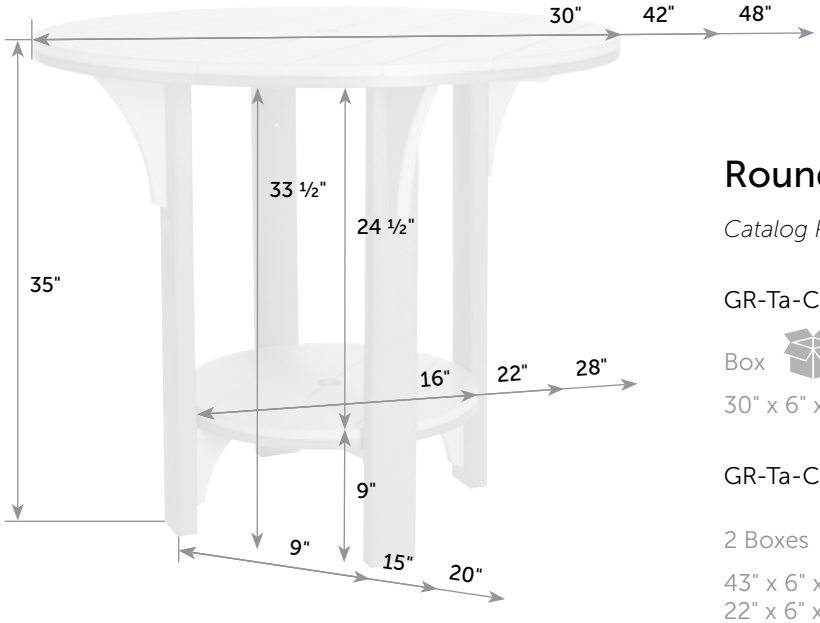

Round Counter Table

Catalog Pg. 85

GR-Ta-Co-30r

Box

30" x 6" x 39"- 60 lb

GR-Ta-Co-42r

2 Boxes

43" x 6" x 43"- 58 lb
22" x 6" x 45"- 25 lb

GR-Ta-Co-48r

2 Boxes

48" x 6" x 48"- 73 lb
22" x 6" x 45"- 30 lb

Item #	W x L	Lb.	Zones	2	3	4	5	6	7	8
GR-Ta-Co-30r	30" x 30"	57		58.00	64.00	67.00	73.00	80.00	86.00	95.00
GR-Ta-Co-42r	42" x 42"	83		260.00	265.00	270.00	275.00	280.00	285.00	290.00
GR-Ta-Co-48r	48" x 48"	103		260.00	265.00	270.00	275.00	280.00	285.00	290.00

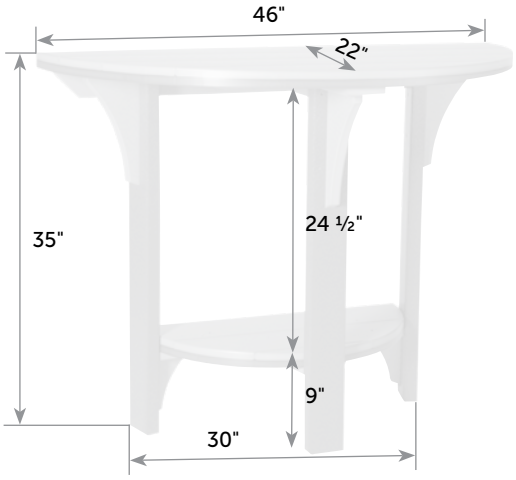

46" ½ Round Counter Table

GR-Ta-Co-46hr *Catalog Pg. 85*

Box

25" x 7" x 46"

Item #	lbs	Zones	2	3	4	5	6	7	8
GR-Ta-Co-46hr	57		62.00	66.00	70.00	77.00	82.00	90.00	98.00

Great Bay Counter

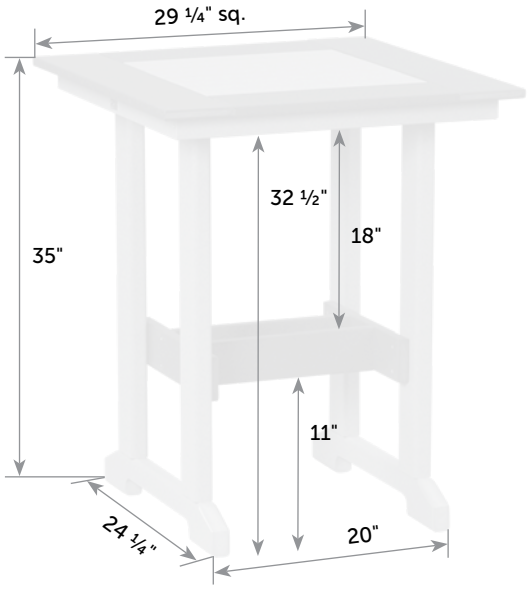

29" Square Counter Table

GR-Ta-Co-29x29 *Catalog Pg. 85*

Box

30" x 6" x 39"

Item #	lbs	Zones	2	3	4	5	6	7	8
GR-Ta-Co-29x29	65		65.00	69.00	73.00	80.00	86.00	93.00	101.00

Great Bay Bar

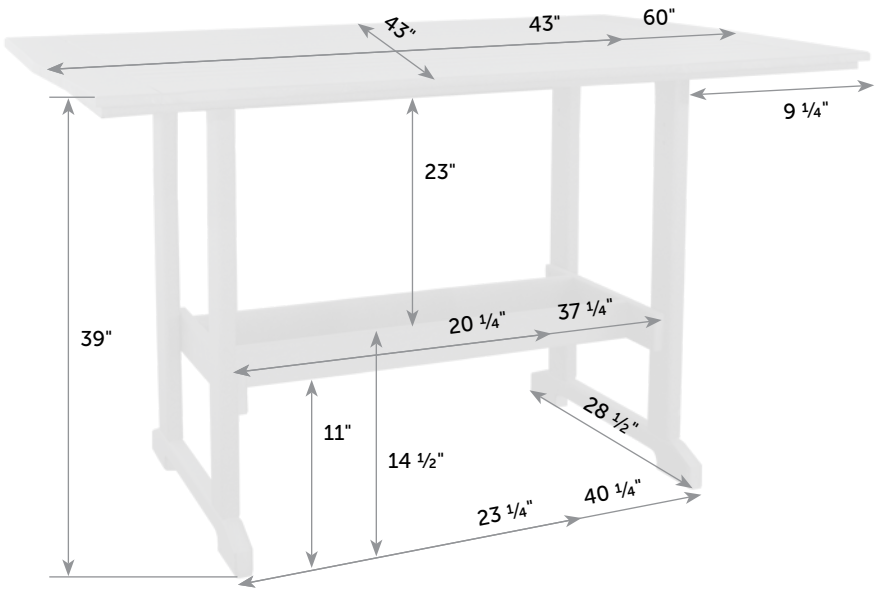

Great Bay Bar Table

Catalog Pg. 89

GR-Ta-Ba-43x43

2 Boxes

43" x 4" x 43"- 80 lb
22" x 7" x 22"- 25 lb

GR-Ta-Ba-43x60

Freight

Item #	W x L	Lb.	Zones	2	3	4	5	6	7	8
GR-Ta-Ba-43x43	43" x 43"	105		264.00	265.00	267.00	270.00	277.00	284.00	291.00
GR-Ta-Ba-43x60	43" x 60"	115		389.00	389.00	389.00	399.00	399.00	409.00	409.00

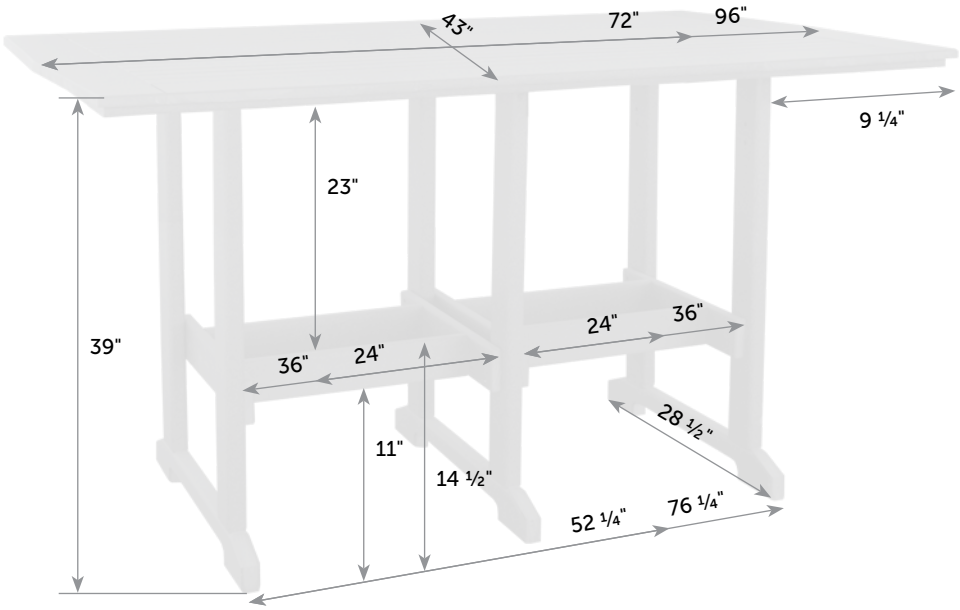

Great Bay Bar Table

Catalog Pg. 89

Freight

Item #	W x L	Lb.	Zones	2	3	4	5	6	7	8
GR-Ta-Ba-43x72	43" x 72"	150		389.00	389.00	389.00	389.00	389.00	409.00	426.80
GR-Ta-Ba-43x96	43" x 96"	165		389.00	389.00	389.00	389.00	426.80	426.80	479.00

Great Bay Bar

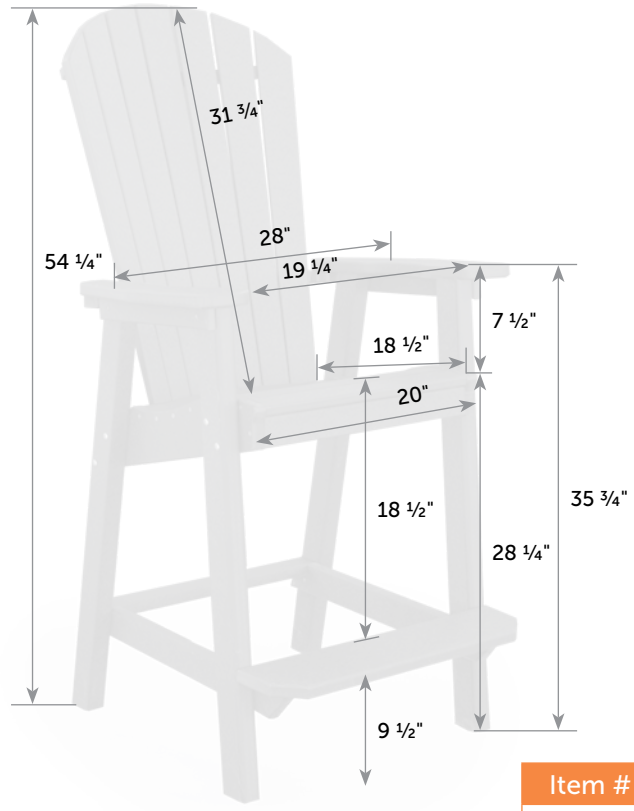

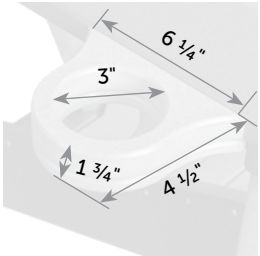

Cup Holder

CU

Box 6"x6"x6"

Catalog Pg. 89

Great Bay Bar Chair

GR-Ch-Ba *Catalog Pg. 88*

Box 25" x 11" x 43"

33 ½" 54 ¼" H 28"

Item #	lbs	Zones	2	3	4	5	6	7	8
GR-Ch-Ba	50		36.00	42.00	45.00	51.00	58.00	64.00	73.00
CU	2		15.00	15.00	16.00	16.00	17.00	17.00	18.00
GR-At	5		24.00	25.00	26.00	27.00	27.00	28.00	28.00

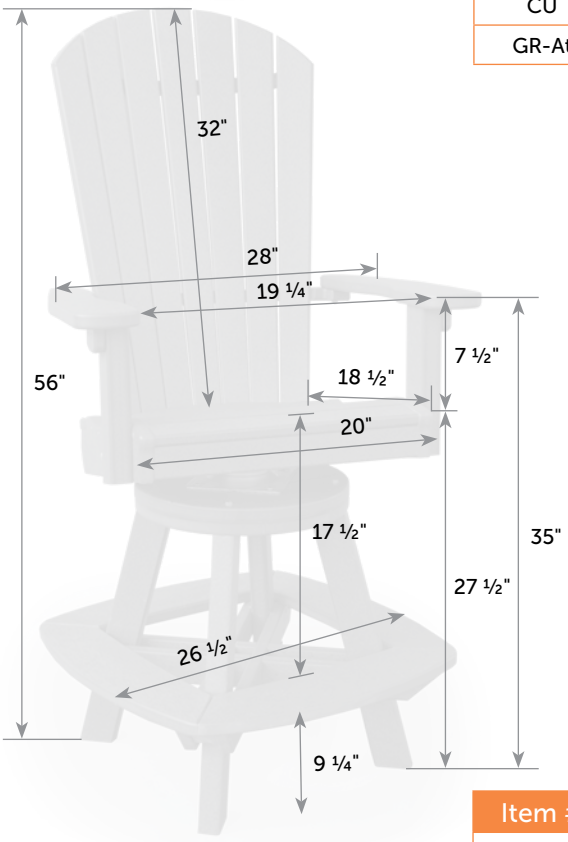

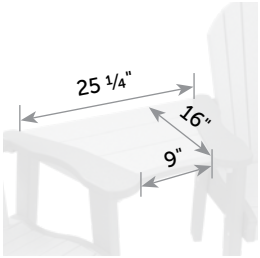

Table Attachment

GR-At

Box 22" x 6" x 22"

Catalog Pg. 89

Table attaches easily with 4 thumb-screws.

Great Bay Swivel Bar Chair

GR-ChS-Ba *Catalog Pg. 88*

Freight

29 ½" 56" H 28"

Item #	lbs	Zones	2	3	4	5	6	7	8
GR-ChS-Ba	70		389.00	399.00	409.00	436.00	467.00	497.00	527.00

Seat Cushion for Great Bay Bar Chair

GR-Cu-Ba *Catalog Pg. 88*

Box
22" x 6" x 22"

Item #	lbs	Zones	2	3	4	5	6	7	8
GR-Cu-Ba	3		22.00	23.00	24.00	24.00	25.00	25.00	26.00

Seat Cushion for Great Bay Stool

GR-CuS *Catalog Pg. 89*

Box
18" x 18" x 4"

Item #	lbs	Zones	2	3	4	5	6	7	8
GR-CuS	2		22.00	23.00	24.00	24.00	25.00	25.00	26.00

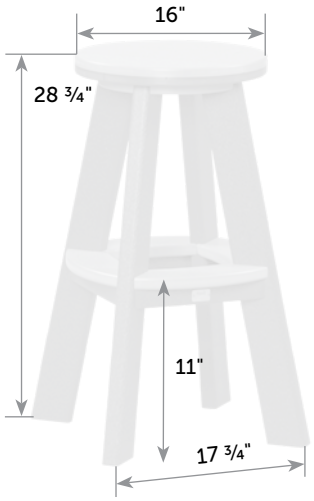

Great Bay Bar Stool

GR-St-Ba *Catalog Pg. 89*

Box

18" x 18" x 30"

Item #	lbs	Zones	2	3	4	5	6	7	8
GR-St-Ba	30		29.87	33.99	37.63	44.32	50.34	57.31	65.49

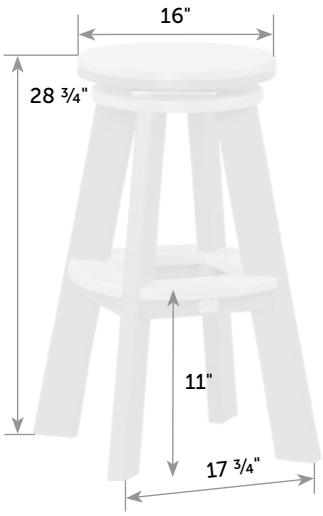

Great Bay Swivel Bar Stool

GR-StS-Ba *Catalog Pg. 89*

Box

18" x 18" x 30"

Item #	lbs	Zones	2	3	4	5	6	7	8
GR-StS-Ba	30		29.87	33.99	37.63	44.32	50.34	57.31	65.49

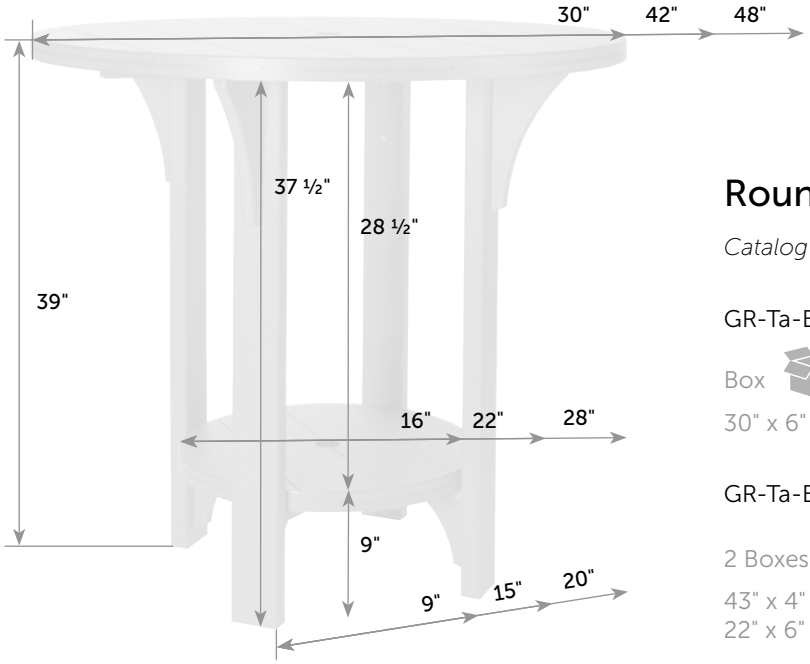

Round Bar Table

Catalog Pg. 89

GR-Ta-Ba-30r

Box

30" x 6" x 39"- 60 lb

GR-Ta-Ba-42r

2 Boxes

43" x 4" x 43"- 60 lb
22" x 6" x 45"- 25 lb

GR-Ta-Ba-48r

2 Boxes

48" x 4" x 48"- 75 lb
22" x 6" x 45"- 30 lb

Item #	W x L	Lb.	Zones	2	3	4	5	6	7	8
GR-Ta-Ba-30r	30" x 30"	60		58.00	64.00	67.00	73.00	80.00	86.00	95.00
GR-Ta-Ba-42r	42" x 42"	85		260.00	265.00	270.00	275.00	280.00	285.00	290.00
GR-Ta-Ba-48r	48" x 48"	105		260.00	265.00	270.00	275.00	280.00	285.00	290.00

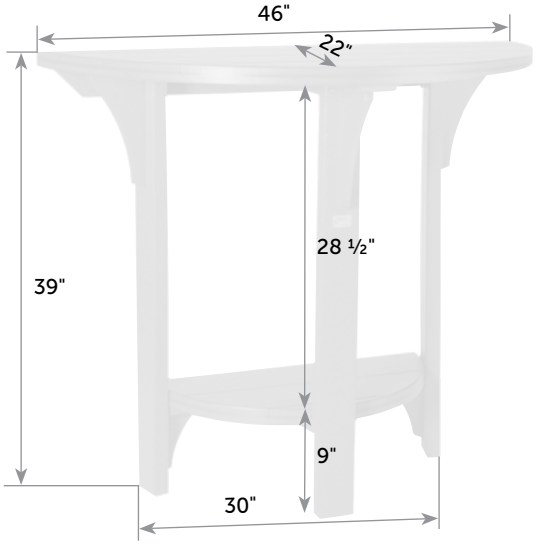

46" ½ Round Bar Table

GR-Ta-Ba-46hr *Catalog Pg. 89*

Box

25" x 7" x 46"

Item #	lbs	Zones	2	3	4	5	6	7	8
GR-Ta-Ba-46hr	60		62.00	66.00	70.00	77.00	82.00	90.00	98.00

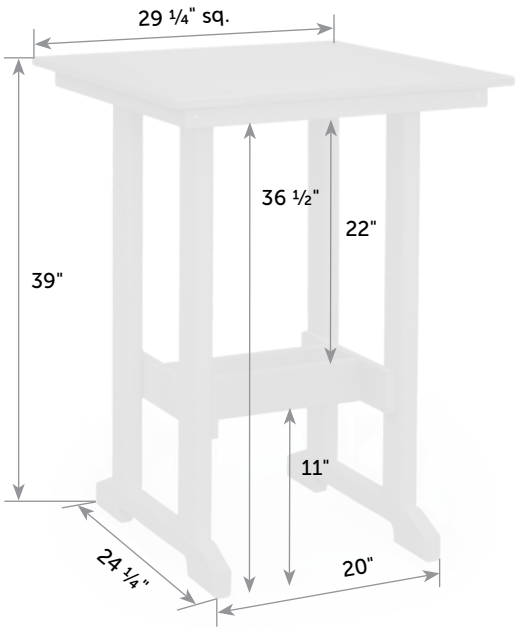

29" Square Bar Table

GR-Ta-Ba-29x29 *Catalog Pg. 89*

Box

30" x 6" x 39"

Item #	lbs	Zones	2	3	4	5	6	7	8
GR-Ta-Ba-29x29	65		65.00	69.00	73.00	80.00	86.00	93.00	101.00

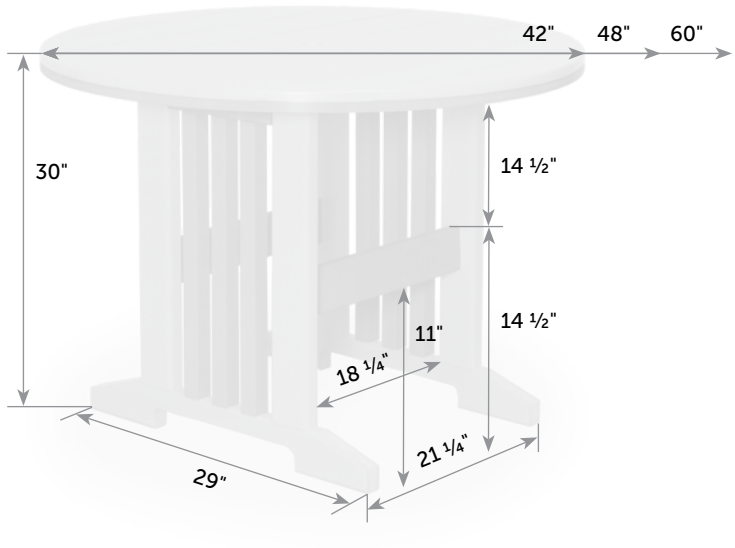

Keystone Round Dining Table

Catalog Pg. 93

KE-Ta-Di-42r

2 Boxes

43" x 4" x 43"- 60 lb
34" x 4" x 34" -30 lb

KE-Ta-Di-48r

2 Boxes

48" x 4" x 48"- 80 lb
34" x 4" x 34" -30 lb

KE-Ta-Di-60r

Freight

Item #	W x L	Lb.	Zones	2	3	4	5	6	7	8
KE-Ta-Di-42r	42" x 42"	85		260.00	265.00	270.00	275.00	280.00	285.00	290.00
KE-Ta-Di-48r	48" x 48"	105		260.00	265.00	270.00	275.00	280.00	285.00	290.00
KE-Ta-Di-60r	60" x 60"	175		389.00	399.00	419.00	439.00	459.00	469.00	489.00

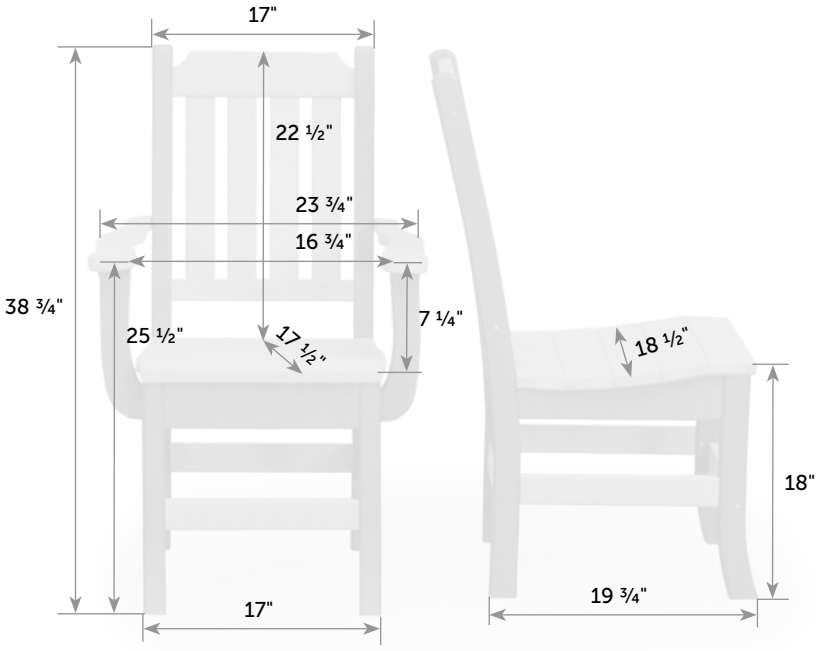

KE-ChA-Di KE-Ch-Di

Keystone Dining Chair

KE-Ch-Di *Catalog Pg. 93*

Box

24" x 27" x 40"

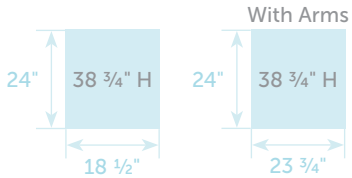

Item #	lbs	Zones	2	3	4	5	6	7	8
KE-Ch-Di	25		66.77	67.16	69.71	72.75	79.99	86.14	93.25
KE-ChA-Di	30		229.00	229.00	229.00	246.00	277.00	277.00	332.00

Keystone dining chairs also go well with the Great Bay, Mission and Garden tables.

Seat Cushion for Keystone Chair

KE-Cu *Catalog Pg. 93*

Box

22" x 6" x 22"

Item #	lbs	Zones	2	3	4	5	6	7	8
KE-Cu	2		22.00	23.00	24.00	24.00	25.00	25.00	26.00

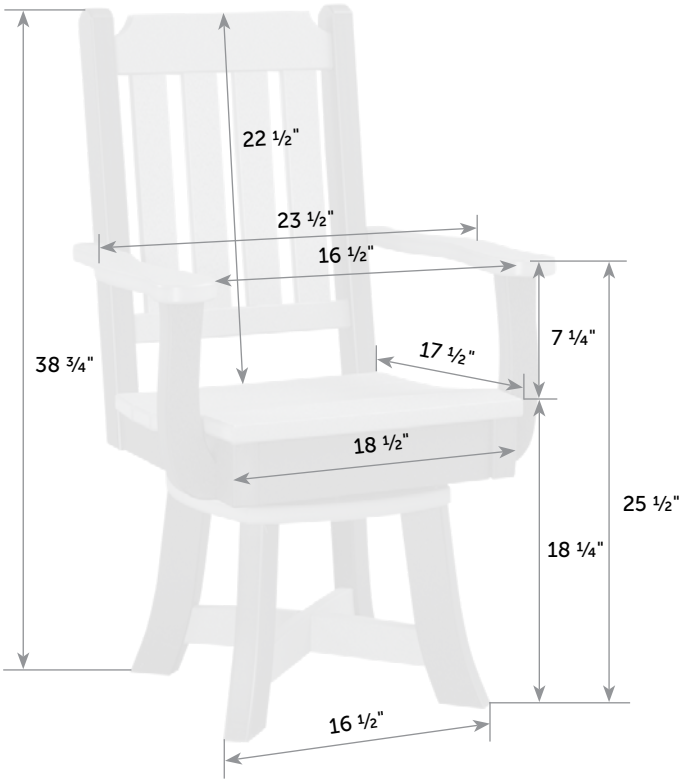

Keystone Swivel Dining Chair

KE-ChS-Di *Catalog Pg. 93*

Box

24" x 27" x 40"

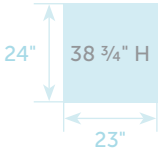

Item #	lbs	Zones	2	3	4	5	6	7	8
KE-ChS-Di	47		229.00	229.00	229.00	246.00	277.00	277.00	332.00

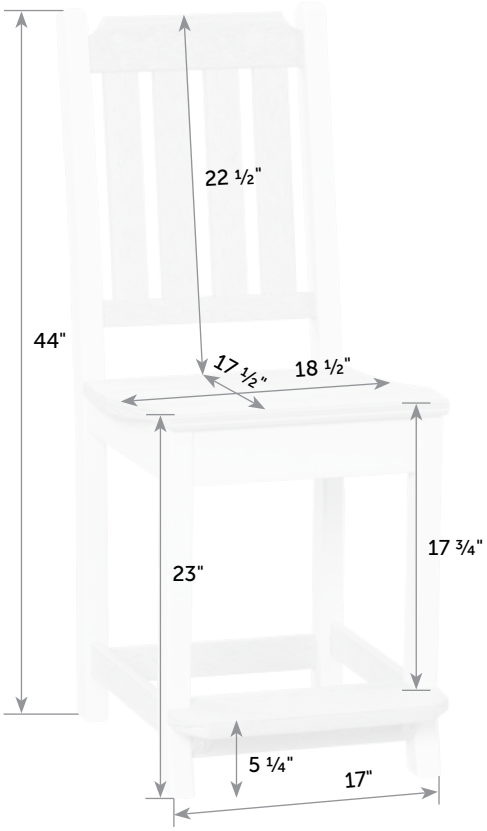

Keystone Counter Chair

KE-Ch-Co *Catalog Pg. 97*

Freight

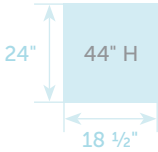

Item #	lbs	Zones	2	3	4	5	6	7	8
KE-Ch-Co	35		229.00	229.00	229.00	246.00	277.00	277.00	332.00

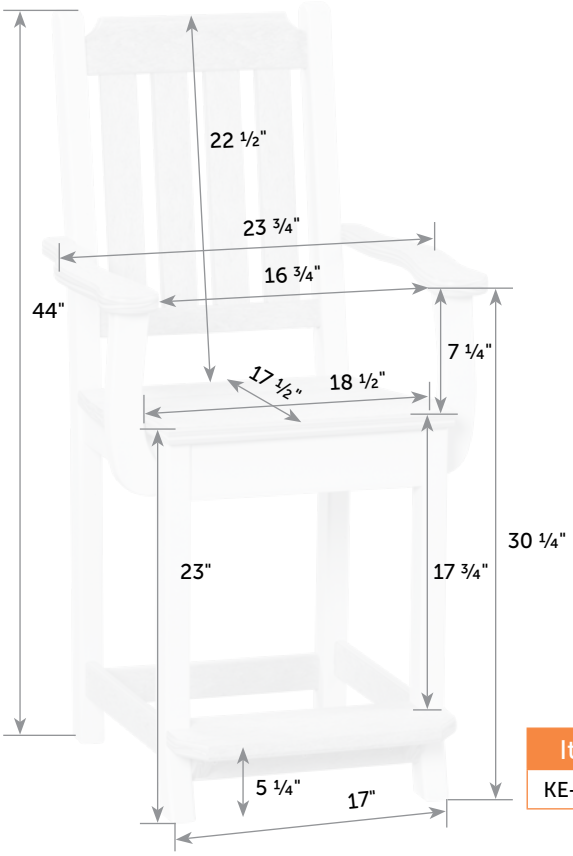

Keystone Counter Chair with Arms

KE-ChA-Co *Catalog Pg. 97*

Freight

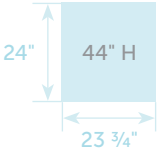

Item #	lbs	Zones	2	3	4	5	6	7	8
KE-ChA-Co	40		229.00	229.00	229.00	246.00	277.00	277.00	332.00

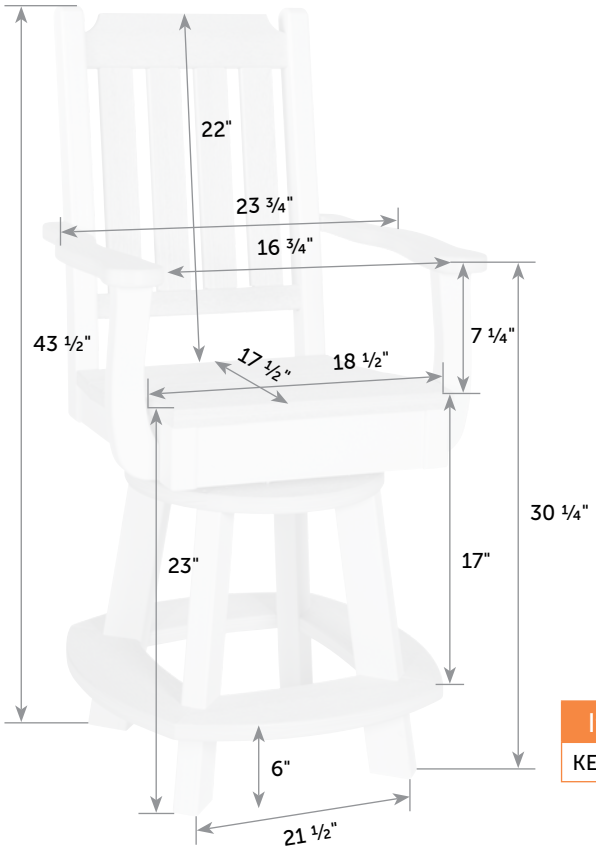

Keystone Swivel Counter Chair

Ke-ChS-Co

Catalog Pg. 97

Freight

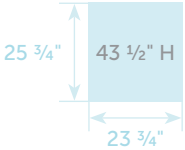

Item #	lbs	Zones	2	3	4	5	6	7	8
KE-ChS-Co	56		229.00	229.00	229.00	246.00	277.00	277.00	332.00

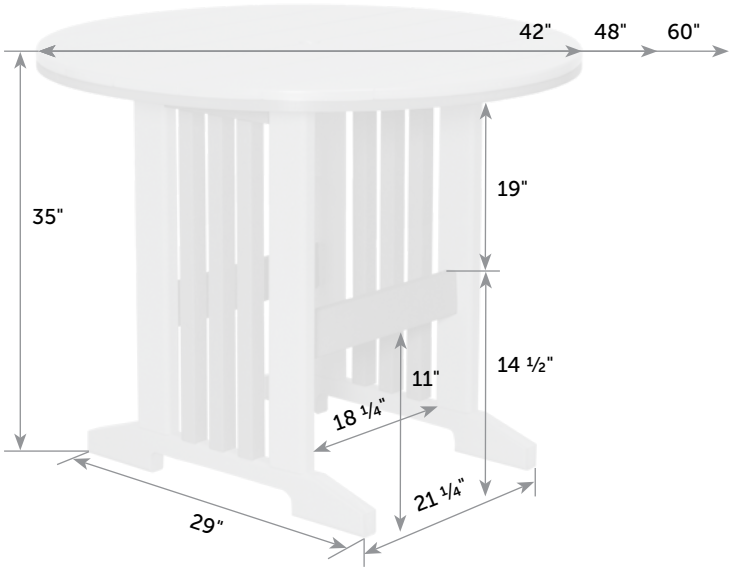

Keystone Round Counter Table

Catalog Pg. 97

KE-Ta-Co-42r

2 Boxes

43" x 4" x 43"- 60 lb
34" x 4" x 34" -30 lb

KE-Ta-Co-48r

2 Boxes

48" x 4" x 48"- 80 lb
34" x 4" x 34" -30 lb

KE-Ta-Co-60r

Freight

Item #	W x L	Lb.	Zones	2	3	4	5	6	7	8
KE-Ta-Co-42r	42" x 42"	90		260.00	265.00	270.00	275.00	280.00	285.00	290.00
KE-Ta-Co-48r	48" x 48"	110		260.00	265.00	270.00	275.00	280.00	285.00	290.00
KE-Ta-Co-60r	60" x 60"	180		389.00	399.00	419.00	439.00	459.00	469.00	489.00

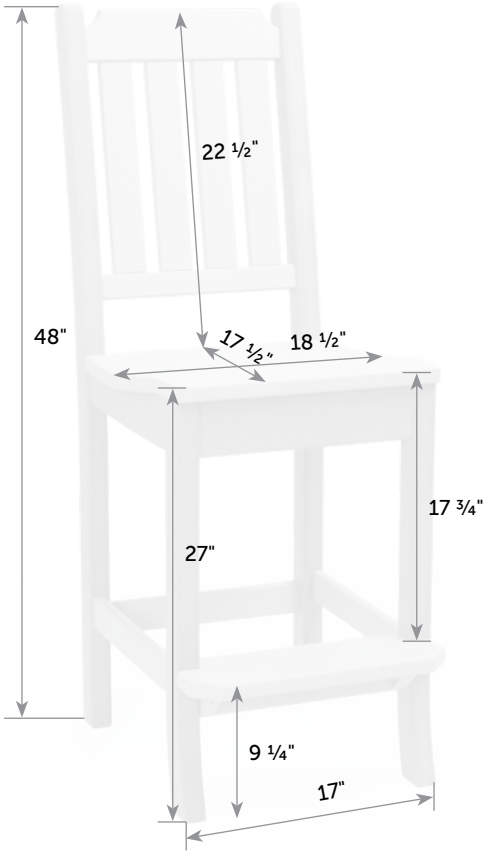

Keystone Bar Chair

KE-Ch-Ba *Catalog Pg. 99*

Freight

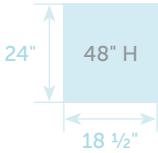

Item #	lbs	Zones	2	3	4	5	6	7	8
KE-Ch-Ba	35		229.00	229.00	229.00	246.00	277.00	277.00	332.00

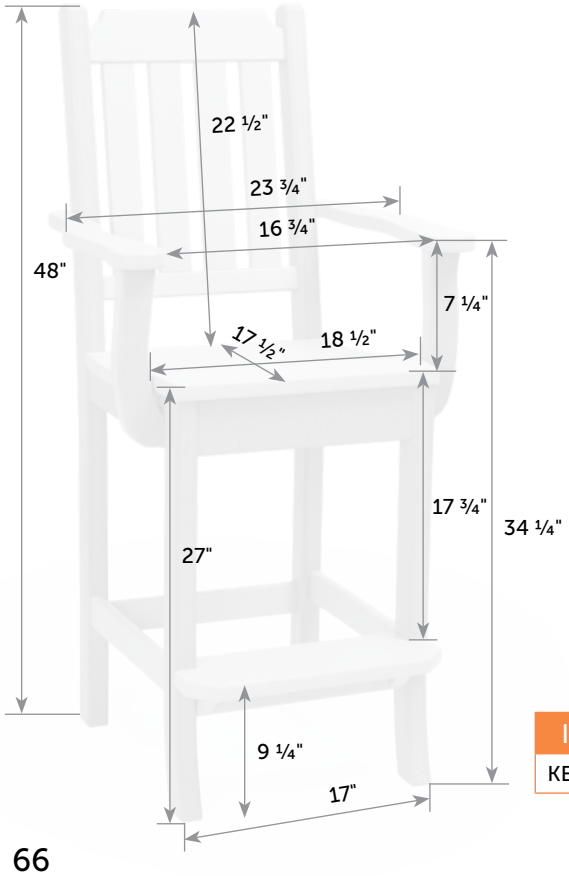

Keystone Bar Chair with Arms

KE-ChA-Ba *Catalog Pg. 99*

Freight

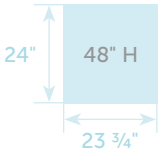

Item #	lbs	Zones	2	3	4	5	6	7	8
KE-ChA-Ba	40		229.00	229.00	229.00	246.00	277.00	277.00	332.00

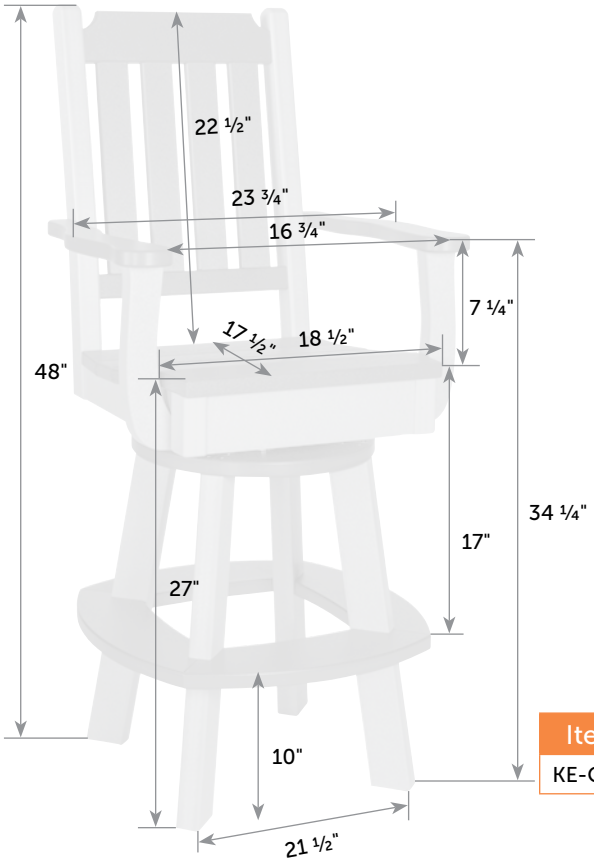

Keystone Swivel Bar Chair

KE-ChS-Ba *Catalog Pg. 99*

Freight

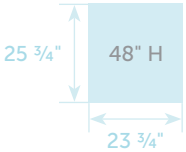

Item #	lbs	Zones	2	3	4	5	6	7	8
KE-ChS-Ba	57		229.00	229.00	229.00	246.00	277.00	277.00	332.00

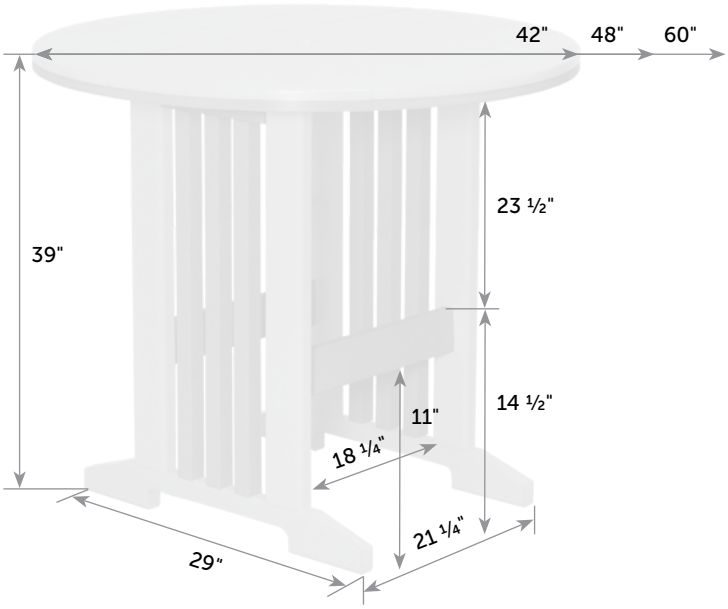

Keystone Round Bar Table

Catalog Pg. 99

KE-Ta-Ba-42r

2 Boxes

43" x 4" x 43"- 60 lb
34" x 4" x 34" -30 lb

KE-Ta-Ba-48r

2 Boxes

48" x 4" x 48"- 80 lb
34" x 4" x 34" -30 lb

KE-Ta-Ba-60r

Freight

Item #	W x L	Lb.	Zones	2	3	4	5	6	7	8
KE-Ta-Ba-42r	42" x 42"	95		260.00	265.00	270.00	275.00	280.00	285.00	290.00
KE-Ta-Ba-48r	48" x 48"	115		260.00	265.00	270.00	275.00	280.00	285.00	290.00
KE-Ta-Ba-60r	60" x 60"	185		389.00	399.00	419.00	439.00	459.00	469.00	489.00

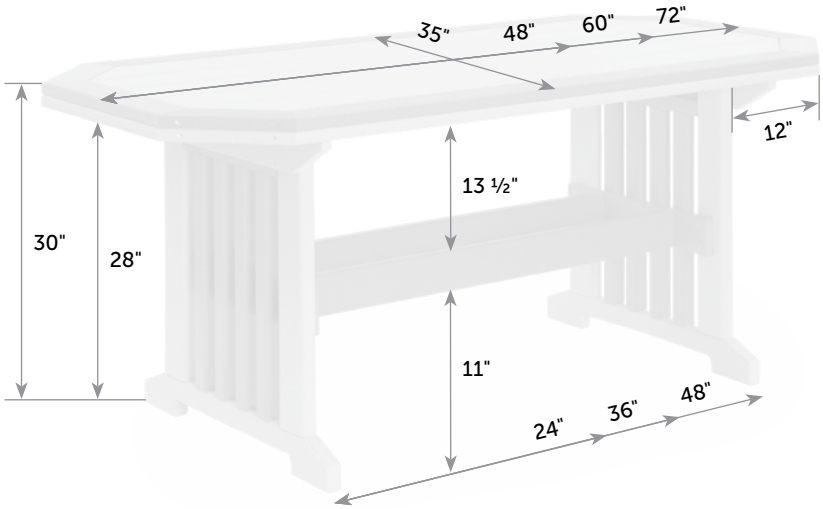

Mission Tables with Border

Catalog Pg. 103

MI-TaB-35x48

Box

36" x 8" x 48"

MI-TaB-35x60
MI-TaB-35x72

Freight

Item #	W x L	Lb.	Zones	2	3	4	5	6	7	8
MI-TaB-35x48	35" x 48"	115		238.00	239.00	242.00	245.00	253.00	259.00	265.00
MI-TaB-35x60	35" x 60"	125		389.00	389.00	399.00	399.00	409.00	409.00	419.00
MI-TaB-35x72	35" x 72"	135		390.00	390.00	390.00	390.00	390.00	405.00	426.80

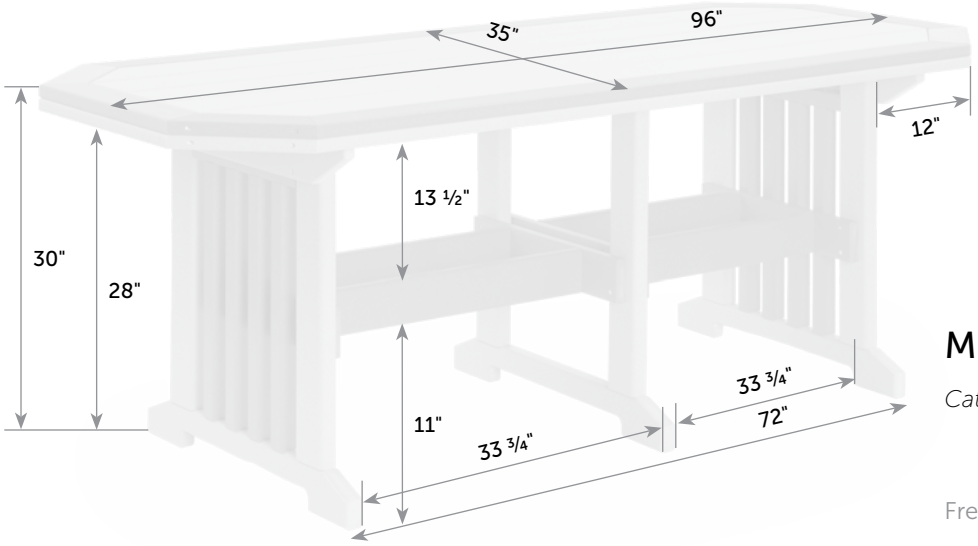

Mission Tables with Border

Catalog Pg. 103

Freight

Item #	W x L	Lb.	Zones	2	3	4	5	6	7	8
MI-TaB-35x96	35" x 96"	165		390.00	390.00	390.00	390.00	425.00	425.00	479.00

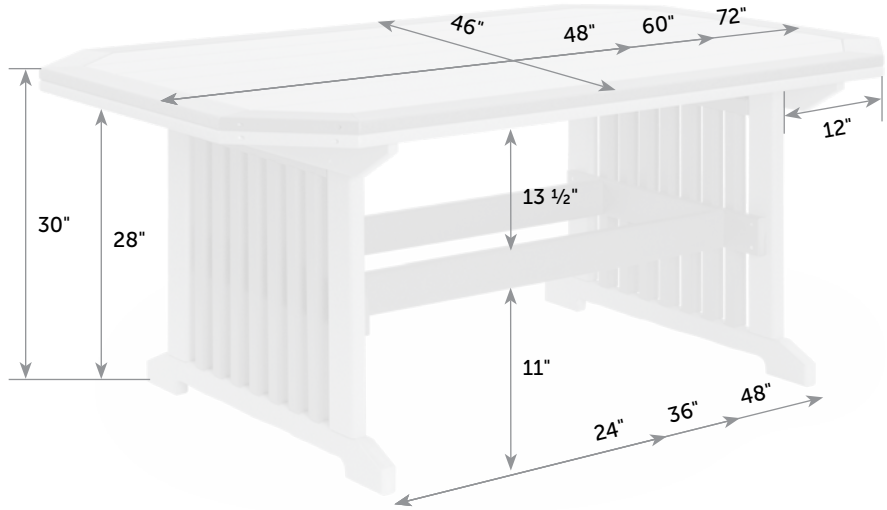

Mission Tables with Border

Catalog Pg. 103

MI-TaB-46x48

Box

48" x 8" x 48"

MI-TaB-46x60
MI-TaB-46x72

Freight

Item #	W x L	Lb.	Zones	2	3	4	5	6	7	8
MI-TaB-46x48	46" x 48"	135		245.00	245.00	248.00	251.00	258.00	264.00	272.00
MI-TaB-46x60	46" x 60"	145		389.00	389.00	399.00	399.00	409.00	409.00	419.00
MI-TaB-46x72	46" x 72"	155		390.00	390.00	390.00	390.00	390.00	405.00	426.80

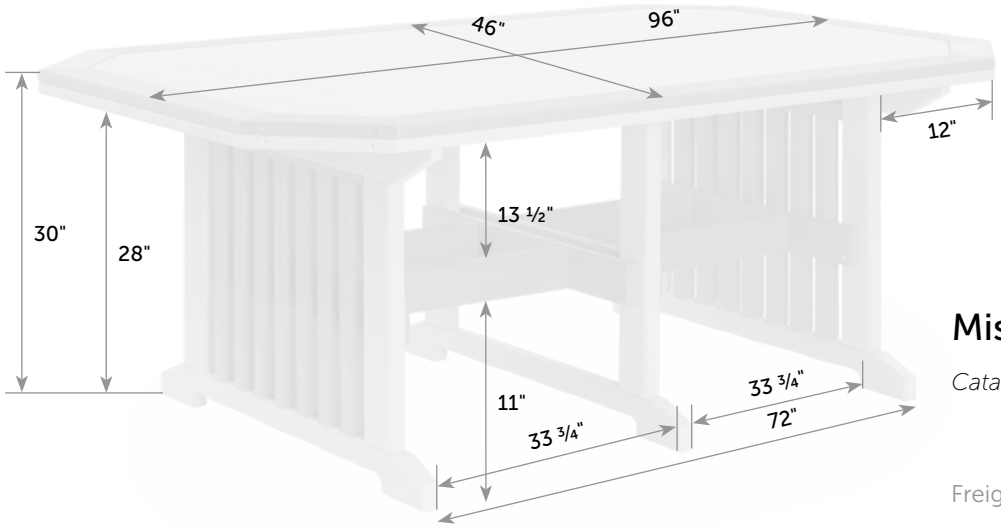

Mission Tables with Border

Catalog Pg. 103

Freight

Item #	W x L	Lb.	Zones	2	3	4	5	6	7	8
MI-TaB-46x96	46" x 96"	185		390.00	390.00	390.00	390.00	425.00	425.00	479.00

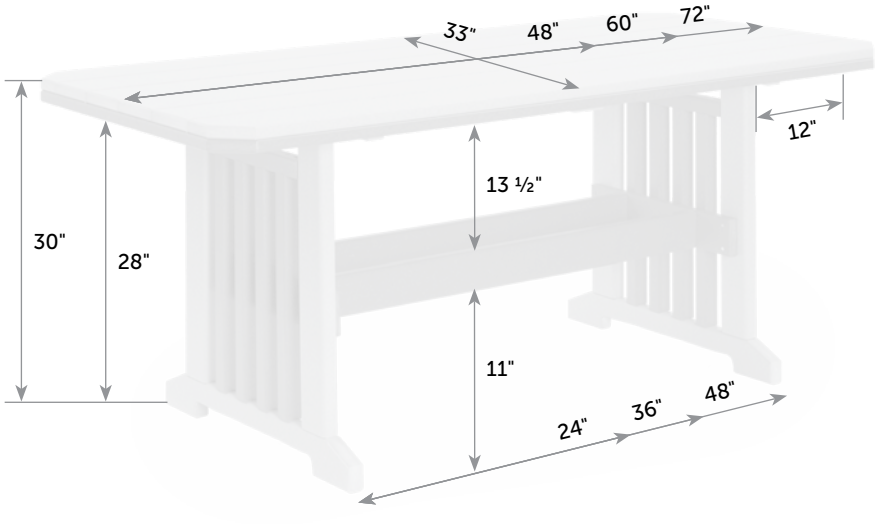

Mission Tables

Catalog Pg. 103

MI-Ta-33x48

Box

36" x 8" x 48"

MI-Ta-33x60
MI-Ta-33x72

Freight

Item #	W x L	Lb.	Zones	2	3	4	5	6	7	8
MI-Ta-33x48	33" x 48"	95		238.00	239.00	242.00	245.00	253.00	259.00	265.00
MI-Ta-33x60	33" x 60"	105		389.00	389.00	399.00	399.00	409.00	409.00	419.00
MI-Ta-33x72	33" x 72"	115		390.00	390.00	390.00	390.00	390.00	405.00	426.80

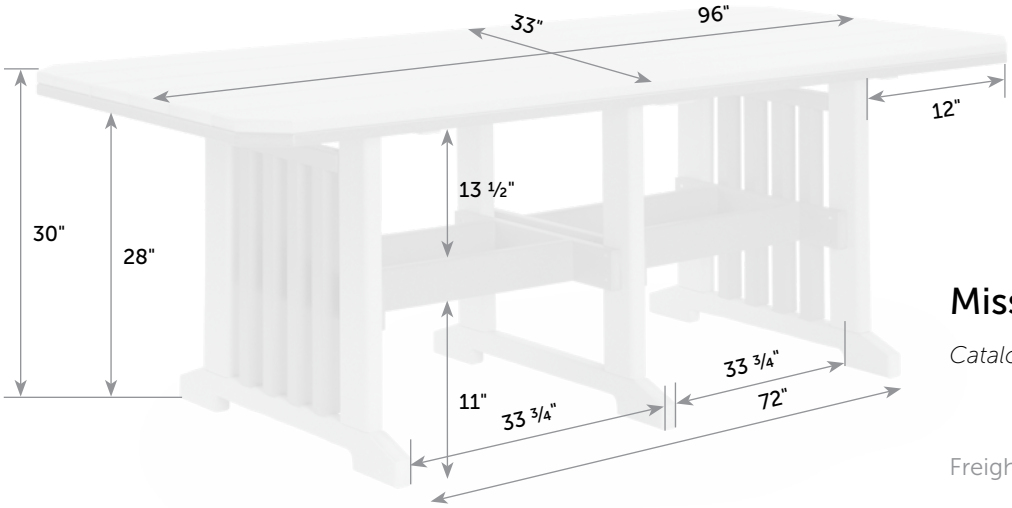

Mission Tables

Catalog Pg. 103

Freight

Item #	W x L	Lb.	Zones	2	3	4	5	6	7	8
MI-Ta-33x96	33" x 96"	145		390.00	390.00	390.00	390.00	425.00	425.00	479.00

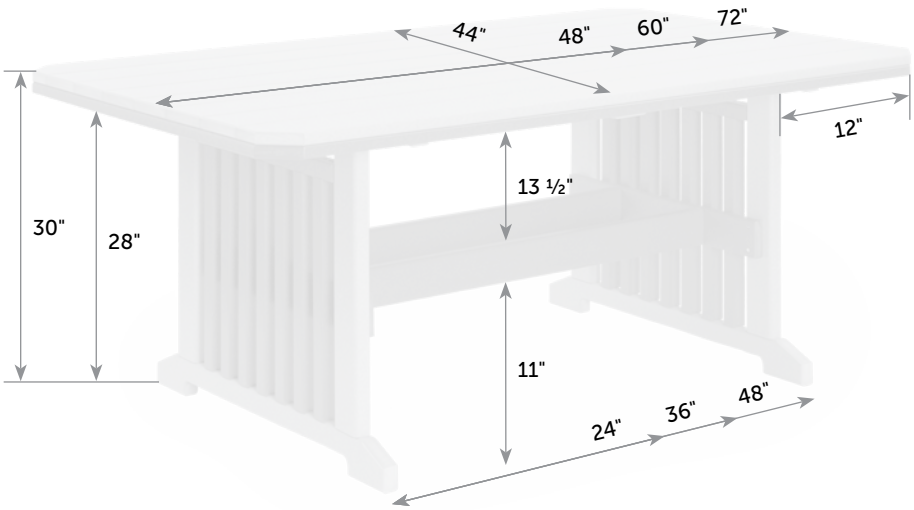

Mission Tables

Catalog Pg. 103

MI-Ta-44x48

Box

48" x 8" x 48"

MI-Ta-44x60
MI-Ta-44x72

Freight

Item #	W x L	Lb.	Zones	2	3	4	5	6	7	8
MI-Ta-44x48	44" x 48"	115		245.00	245.00	248.00	251.00	258.00	264.00	272.00
MI-Ta-44x60	44" x 60"	125		389.00	389.00	399.00	399.00	409.00	409.00	419.00
MI-Ta-44x72	44" x 72"	135		390.00	390.00	390.00	390.00	390.00	405.00	426.80

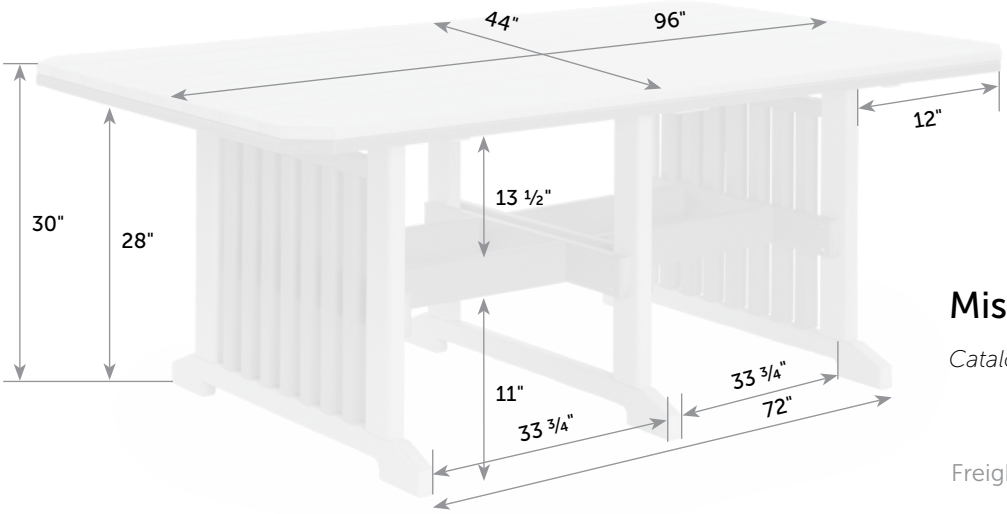

Mission Tables

Catalog Pg. 103

Freight

Item #	W x L	Lb.	Zones	2	3	4	5	6	7	8
MI-Ta-44x96	44" x 96"	165		390.00	390.00	390.00	390.00	425.00	425.00	479.00

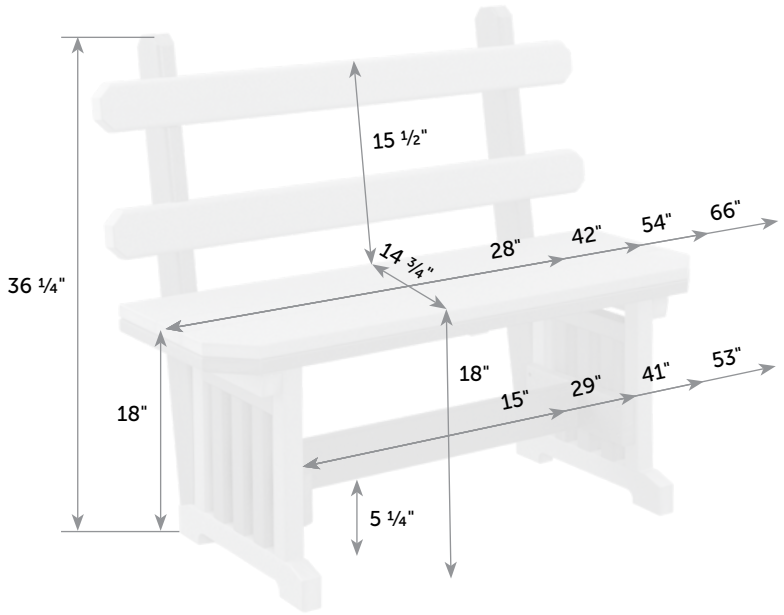

Mission Benches with Backs

Catalog Pg. 103

Box

MI-BeB-28 22" x 6" x 29"
MI-BeB-42 22" x 6" x 43"
MI-BeB-54 22" x 6" x 55"
MI-BeB-66 22" x 6" x 67"

Item #	L	Lb.	Zones	2	3	4	5	6	7	8
MI-BeB-28	28"	45		29.89	33.78	37.25	53.24	49.69	56.60	61.77
MI-BeB-42	42"	60		61.00	66.00	69.00	76.00	82.00	89.00	97.00
MI-BeB-54	54"	70		63.00	69.00	72.00	78.00	85.00	91.00	100.00
MI-BeB-66	66"	80		74.00	78.00	81.00	87.00	94.00	102.00	105.00

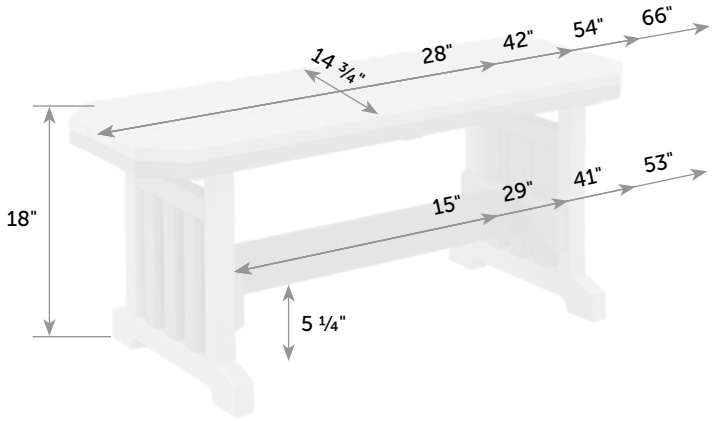

Mission Benches

Catalog Pg. 103

Box

MI-Be-28 16" x 7" x 30"
MI-Be-42 22" x 6" x 43"
MI-Be-54 22" x 6" x 55"
MI-Be-66 22" x 6" x 67"

Item #	L	Lb.	Zones	2	3	4	5	6	7	8
MI-Be-28	28"	30		27.08	29.07	30.42	33.35	38.36	42.22	47.52
MI-Be-42	42"	40		29.00	33.00	35.00	39.00	45.00	50.00	56.00
MI-Be-54	54"	47		54.00	58.00	61.00	66.00	75.00	81.00	86.00
MI-Be-66	66"	55		64.00	69.00	72.00	79.00	85.00	92.00	100.00

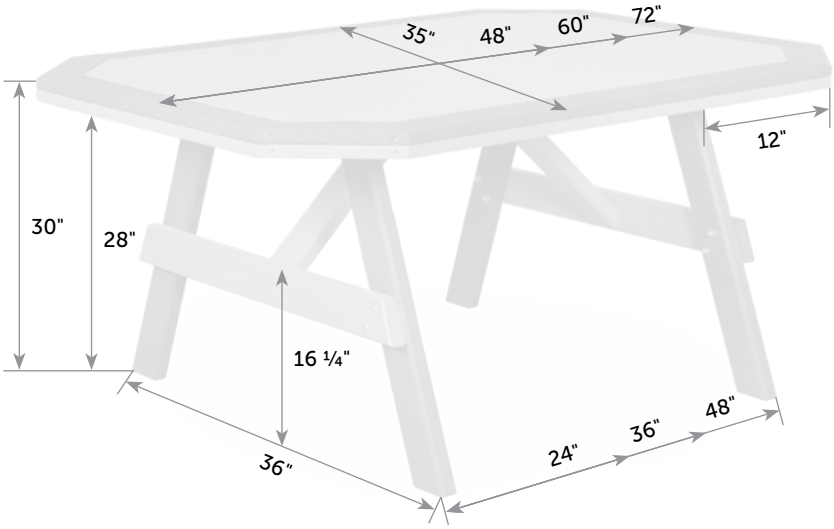

Garden Tables with Border

Catalog Pg. 107

GA-TaB-35x48

Box

36" x 6" x 48"

GA-TaB-35x60
GA-TaB-35x72

Freight

Item #	W x L	Lb.	Zones	2	3	4	5	6	7	8
GA-TaB-35x48	35" x 48"	110		238.00	239.00	242.00	245.00	253.00	259.00	265.00
GA-TaB-35x60	35" x 60"	120		389.00	389.00	399.00	399.00	409.00	409.00	419.00
GA-TaB-35x72	35" x 72"	130		390.00	390.00	390.00	390.00	390.00	405.00	426.80

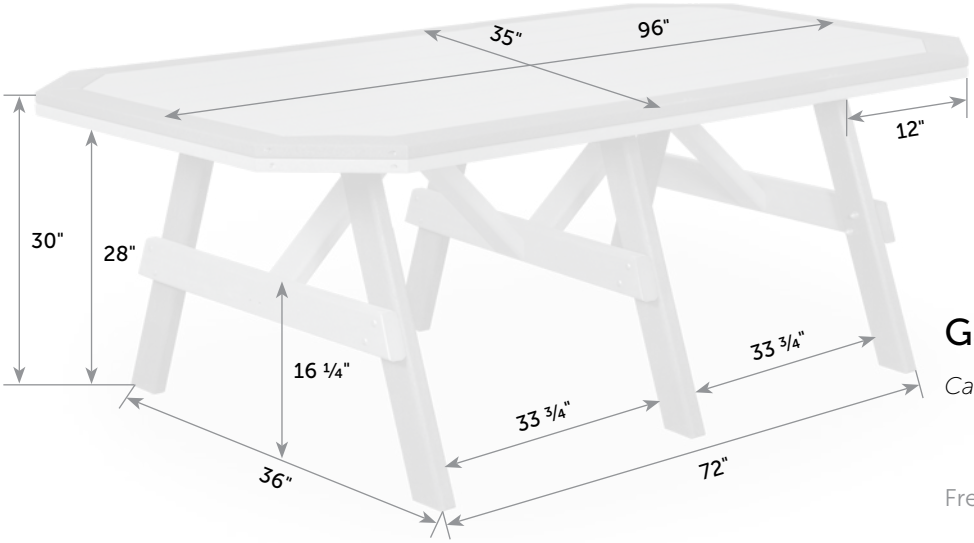

Garden Tables with Border

Catalog Pg. 107

Freight

Item #	W x L	Lb.	Zones	2	3	4	5	6	7	8
GA-TaB-35x96	35" x 96"	160		390.00	390.00	390.00	390.00	425.00	425.00	479.00

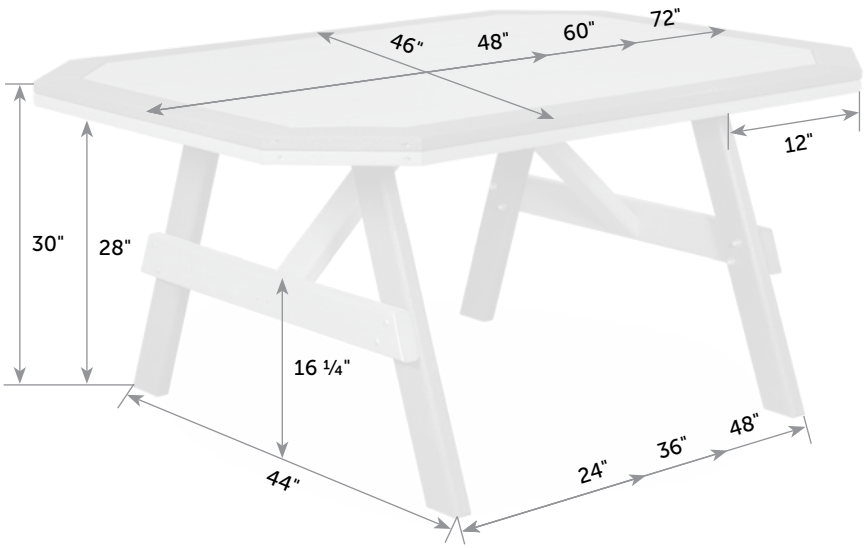

Garden Tables with Border

Catalog Pg. 107

GA-TaB-46x48

Box

48" x 6" x 48"

GA-TaB-46x60
GA-TaB-46x72

Freight

Item #	W x L	Lb.	Zones	2	3	4	5	6	7	8
GA-TaB-46x48	46" x 48"	130		245.00	245.00	248.00	251.00	258.00	264.00	272.00
GA-TaB-46x60	46" x 60"	140		389.00	389.00	399.00	399.00	409.00	409.00	419.00
GA-TaB-46x72	46" x 72"	150		390.00	390.00	390.00	390.00	390.00	405.00	426.80

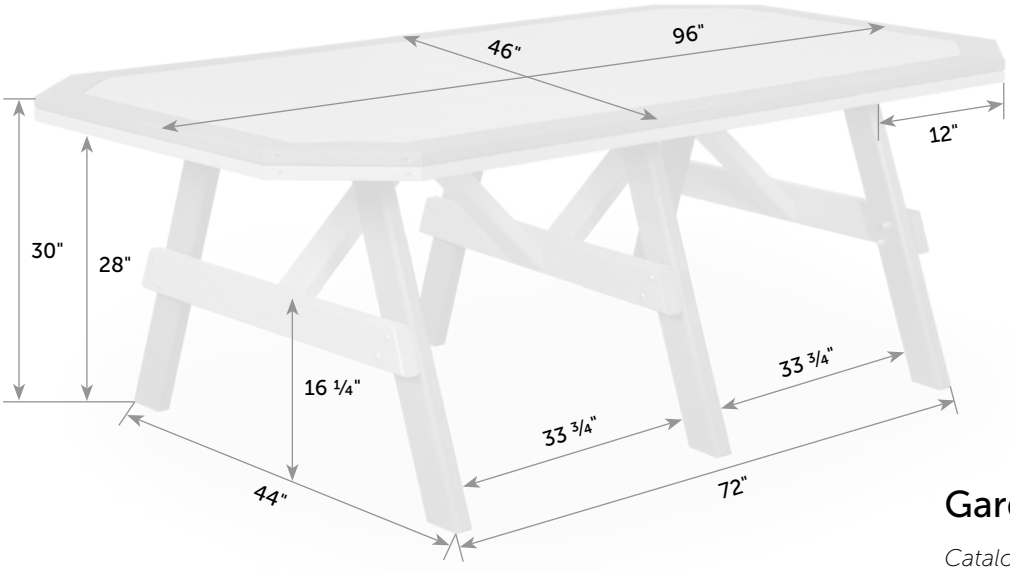

Garden Tables with Border

Catalog Pg. 107

Freight

Item #	W x L	Lb.	Zones	2	3	4	5	6	7	8
GA-TaB-46x96	46" x 96"	180		390.00	390.00	390.00	390.00	425.00	425.00	479.00

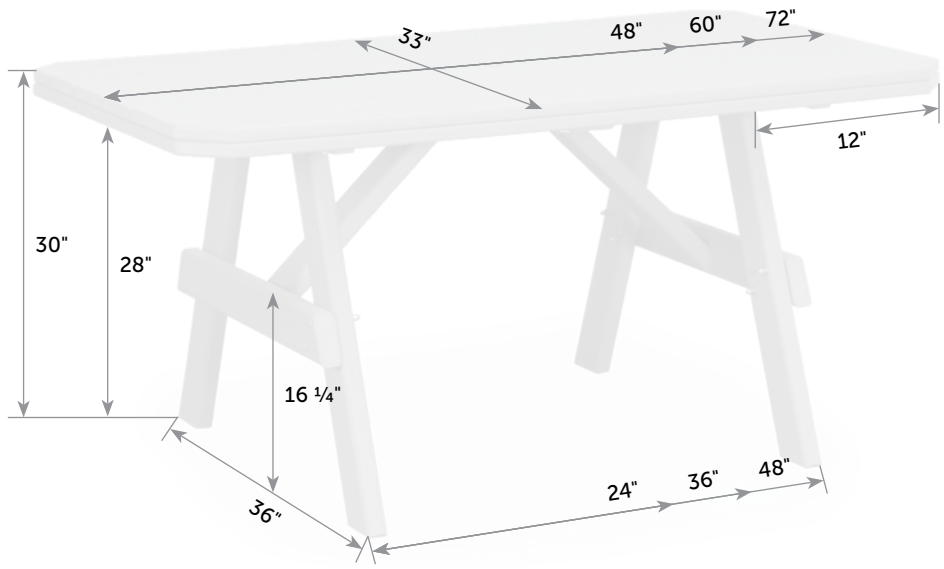

Garden Tables

Catalog Pg. 107

GA-Ta-33x48

Box

36" x 6" x 48"

GA-Ta-33x60
GA-Ta-33x72

Freight

Item #	W x L	Lb.	Zones	2	3	4	5	6	7	8
GA-Ta-33x48	33" x 48"	90		238.00	239.00	242.00	245.00	253.00	259.00	265.00
GA-Ta-33x60	33" x 60"	100		389.00	389.00	399.00	399.00	409.00	409.00	419.00
GA-Ta-33x72	33" x 72"	110		390.00	390.00	390.00	390.00	390.00	405.00	426.80

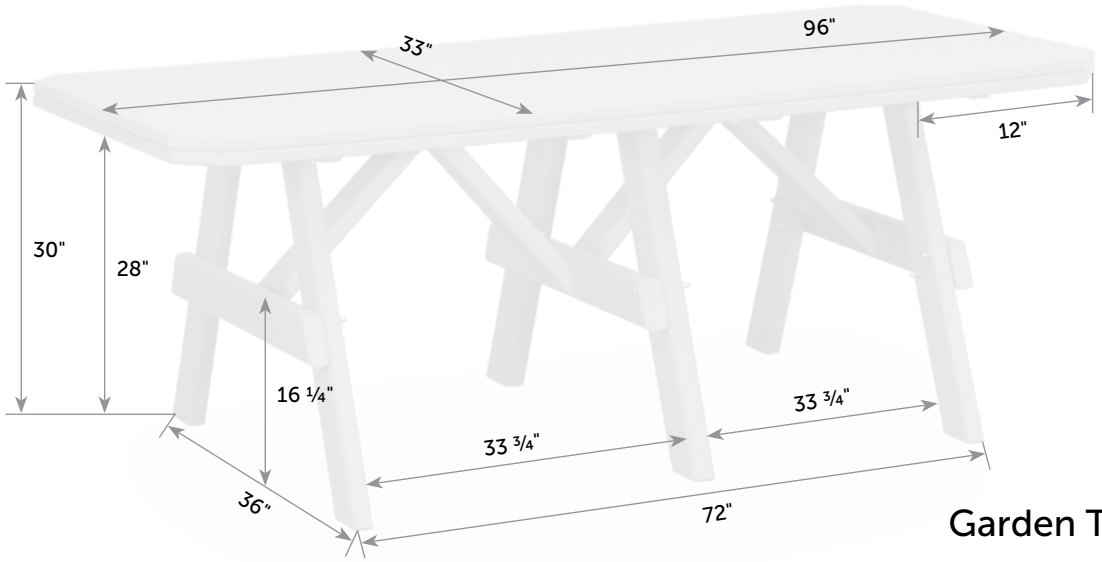

Garden Tables

Catalog Pg. 107

Freight

Item #	W x L	Lb.	Zones	2	3	4	5	6	7	8
GA-Ta-33x96	33" x 96"	140		390.00	390.00	390.00	390.00	425.00	425.00	479.00

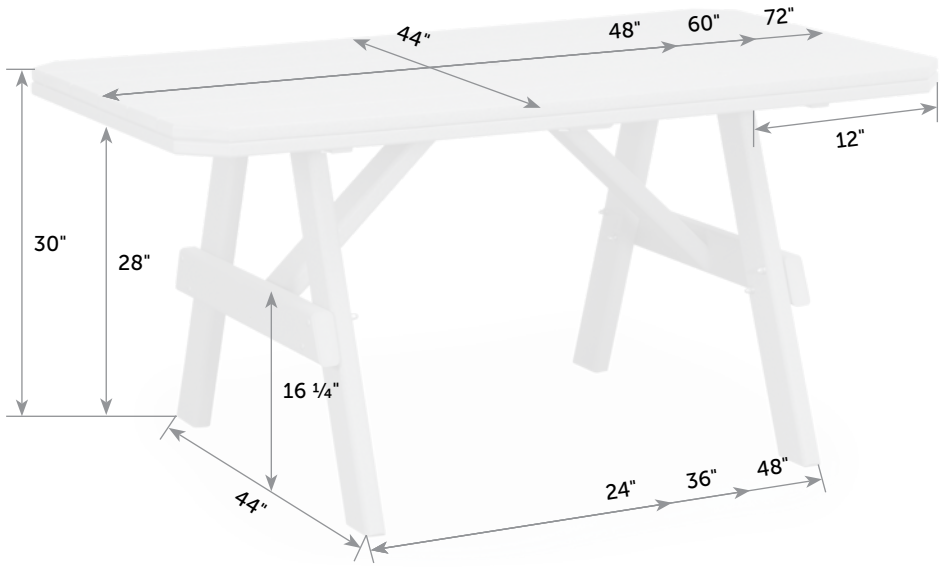

Garden Tables

Catalog Pg. 107

GA-Ta-44x48

Box

48" x 6" x 48"

GA-Ta-44x60
GA-Ta-44x72

Freight

Item #	W x L	Lb.	Zones	2	3	4	5	6	7	8
GA-Ta-44x48	44" x 48"	110		245.00	245.00	248.00	251.00	258.00	264.00	272.00
GA-Ta-44x60	44" x 60"	120		389.00	389.00	399.00	399.00	409.00	409.00	419.00
GA-Ta-44x72	44" x 72"	130		390.00	390.00	390.00	390.00	390.00	405.00	426.80

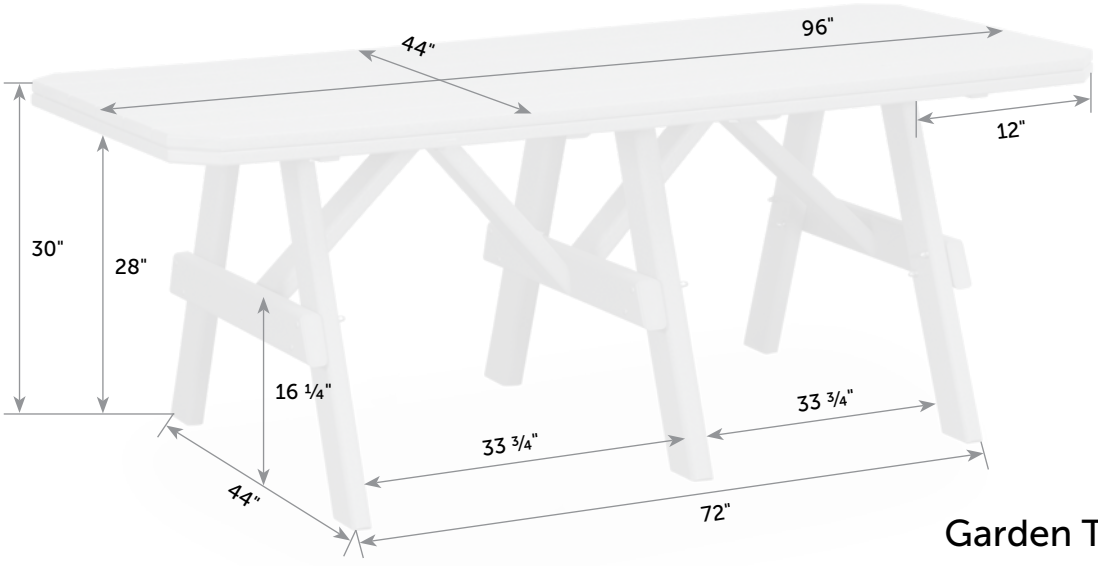

Garden Tables

Catalog Pg. 107

Freight

Item #	W x L	Lb.	Zones	2	3	4	5	6	7	8
GA-Ta-44x96	44" x 96"	160		390.00	390.00	390.00	390.00	425.00	425.00	479.00

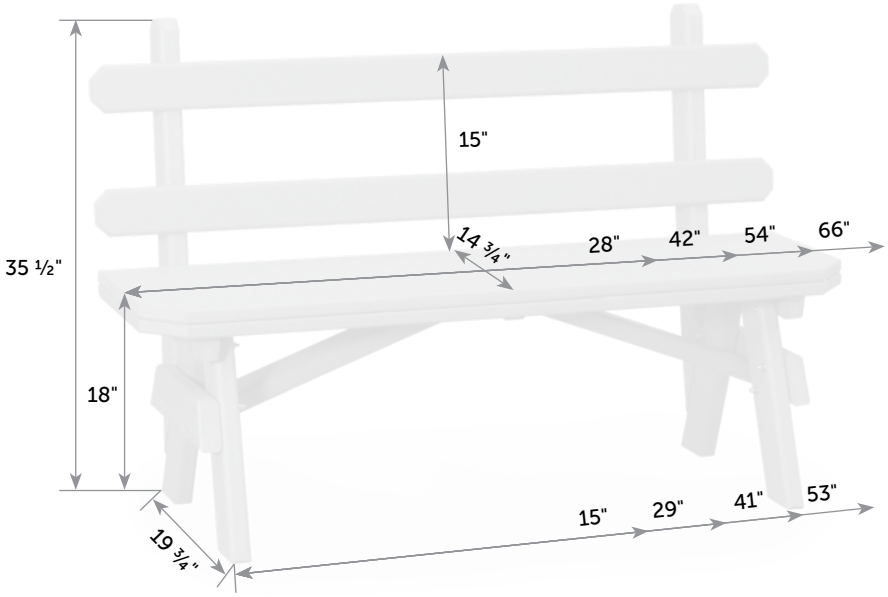

Garden Benches with Backs

Catalog Pg. 107

Box

GA-BeB-28 22" x 6" x 29"
GA-BeB-42 22" x 6" x 43"
GA-BeB-54 22" x 6" x 55"
GA-BeB-66 22" x 6" x 67"

Item #	L	Lb.	Zones	2	3	4	5	6	7	8
GA-BeB-28	28"	45		29.89	33.78	37.25	53.24	49.69	56.60	61.77
GA-BeB-42	42"	60		61.00	65.00	68.00	75.00	81.00	88.00	96.00
GA-BeB-54	54"	70		63.00	68.00	72.00	78.00	85.00	91.00	99.00
GA-BeB-66	66"	80		74.00	77.00	80.00	87.00	94.00	102.00	105.00

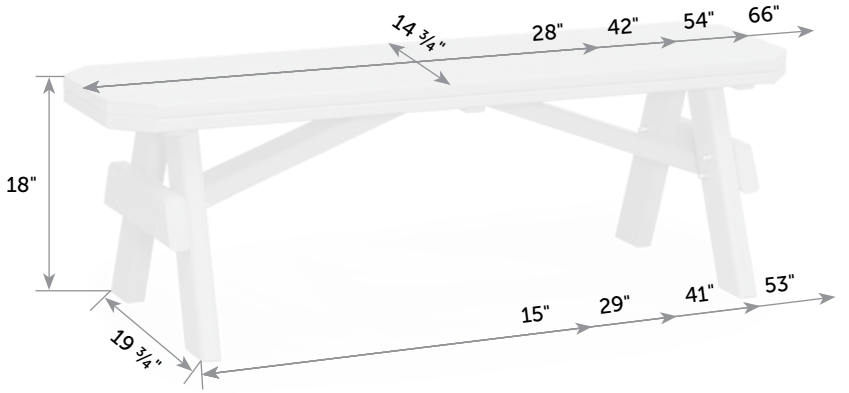

Garden Benches

Catalog Pg. 107

Box

GA-Be-28 22" x 6" x 29"
GA-Be-42 22" x 6" x 43"
GA-Be-54 22" x 6" x 55"
GA-Be-66 22" x 6" x 67"

Item #	L	Lb.	Zones	2	3	4	5	6	7	8
GA-Be-28	28"	30		27.08	29.07	30.42	33.35	38.36	42.22	47.52
GA-Be-42	42"	40		30.00	33.00	35.00	39.00	46.00	51.00	57.00
GA-Be-54	54"	47		53.00	57.00	61.00	66.00	74.00	80.00	85.00
GA-Be-66	66"	55		64.00	68.00	72.00	78.00	85.00	91.00	100.00

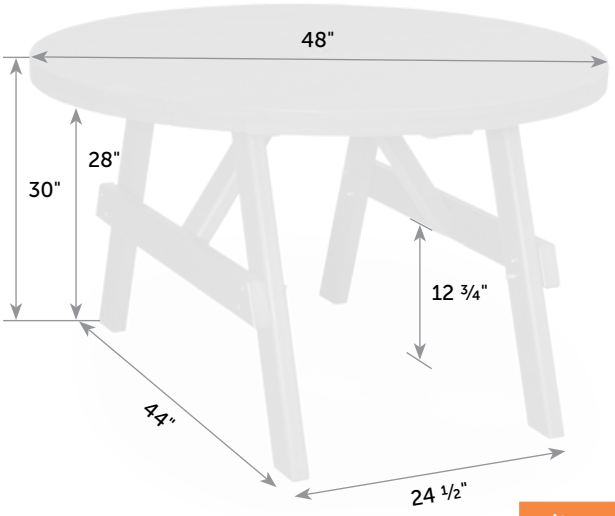

48" Round Garden Table

GA-Ta-48r *Catalog Pg. 107*

Box
48" x 6" x 48"

Item #	lbs	Zones	2	3	4	5	6	7	8
GA-Ta-48r	100		238.00	239.00	242.00	245.00	253.00	259.00	265.00

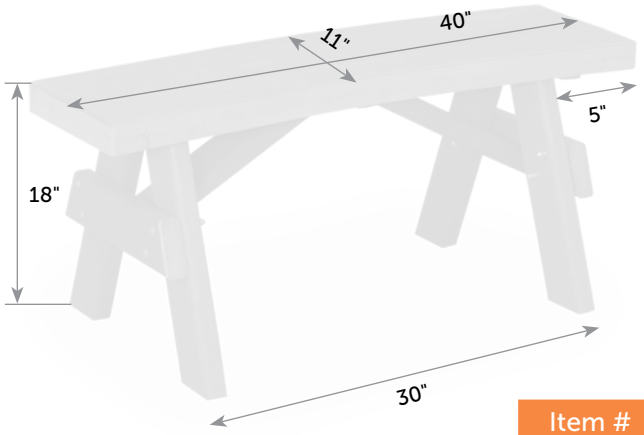

40" Curved Garden Bench

GA-BeC-40 *Catalog Pg. 107*

Box
22" x 6" x 45"

Item #	lbs	Zones	2	3	4	5	6	7	8
GA-BeC-40	40		27.41	30.68	32.84	36.83	43.22	48.11	54.09

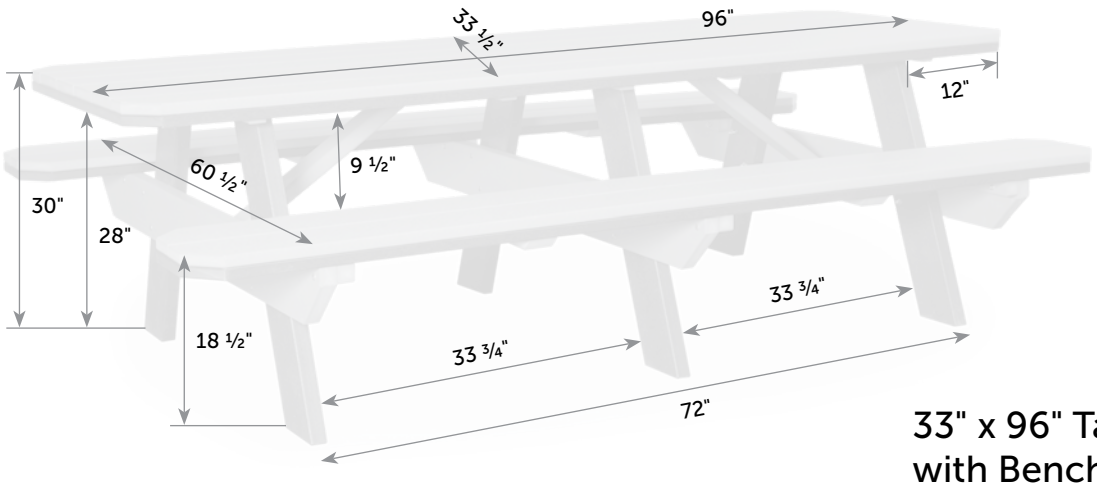

33" x 96" Table with Benches Attached

Catalog Pg. 109

Freight

Item #	lbs	Zones	2	3	4	5	6	7	8
PI-Ta-33x96	360		389.00	399.00	419.00	449.00	479.00	489.00	519.00

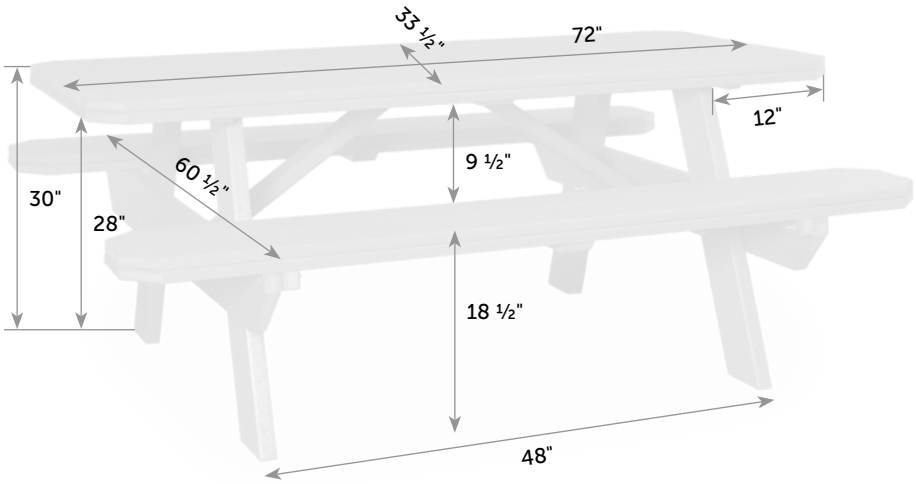

33" x 72" Table with Benches Attached

Catalog Pg. 109

Freight

Item #	lbs	Zones	2	3	4	5	6	7	8
PI-Ta-33x72	215		389.00	399.00	409.00	419.00	429.00	439.00	489.00

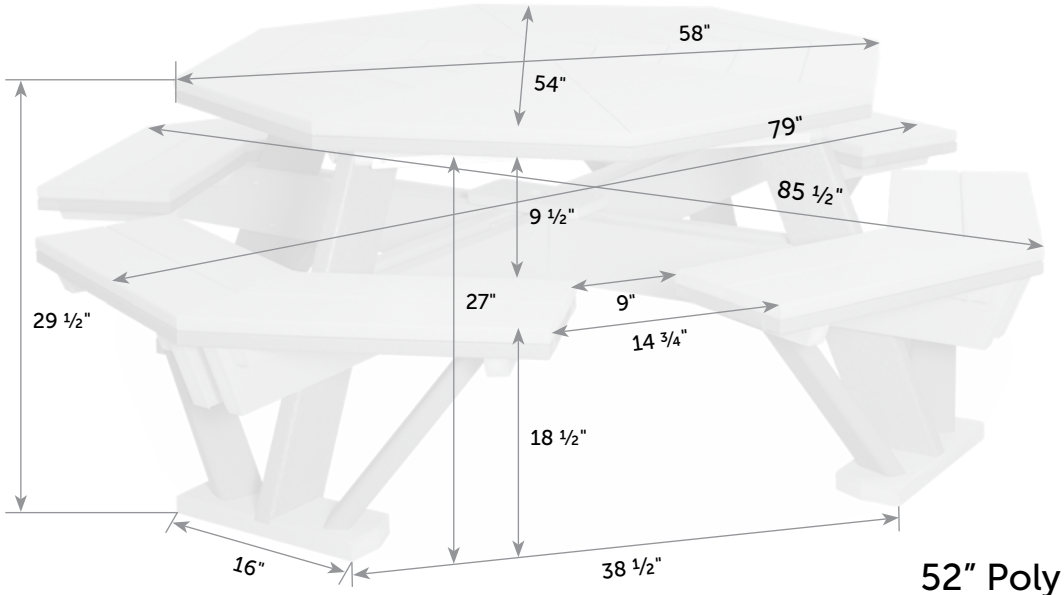

52" Poly Octagon Table with Benches Attached

Catalog Pg. 109

Freight

Item #	lbs	Zones	2	3	4	5	6	7	8
Pl-Ta-52o	360		449.00	499.00	639.00	699.00	819.00	839.00	899.00

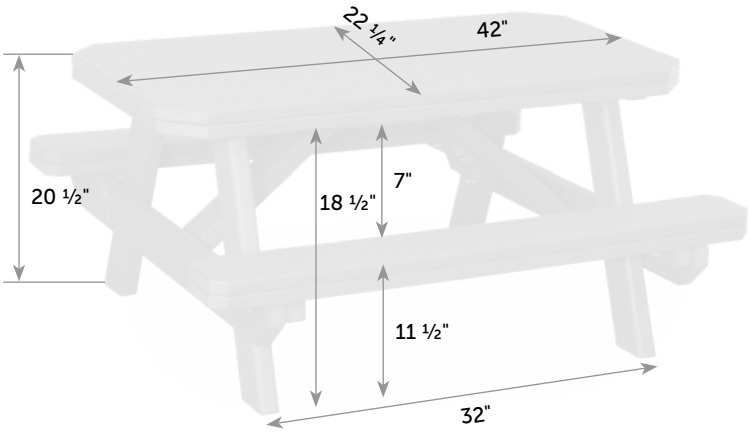

Child's Table with Benches

PI-TaC *Catalog Pg. 111*

Box

25" x 7" x 46"

Item #	lbs	Zones	2	3	4	5	6	7	8
PI-TaC	70		53.00	59.00	62.00	68.00	75.00	81.00	79.00

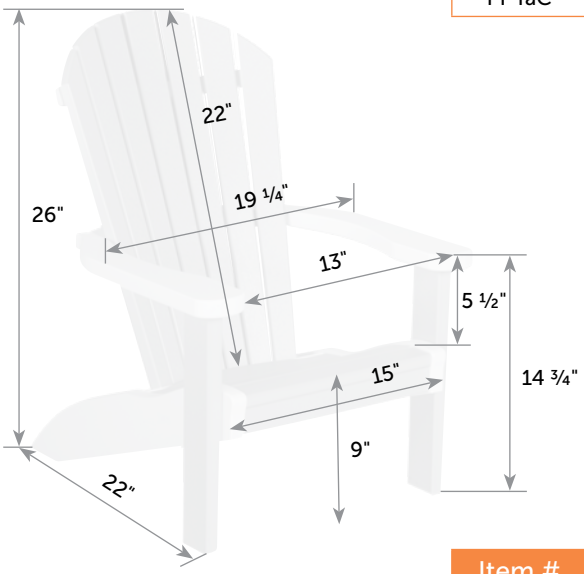

SeaAira Child's Chair

SE-ChC *Catalog Pg. 111*

Box

16" x 7" x 27"

Item #	lbs	Zones	2	3	4	5	6	7	8
SE-ChC	15		25.00	26.00	26.00	27.00	29.00	32.00	34.00

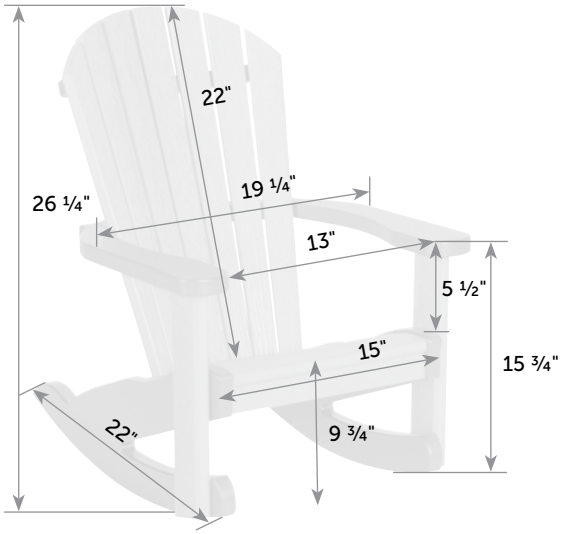

SeaAira Child's Rocker

SE-RoC *Catalog Pg. 111*

Box

16" x 7" x 27"

Item #	lbs	Zones	2	3	4	5	6	7	8
SE-RoC	15		25.00	26.00	26.00	27.00	29.00	32.00	34.00

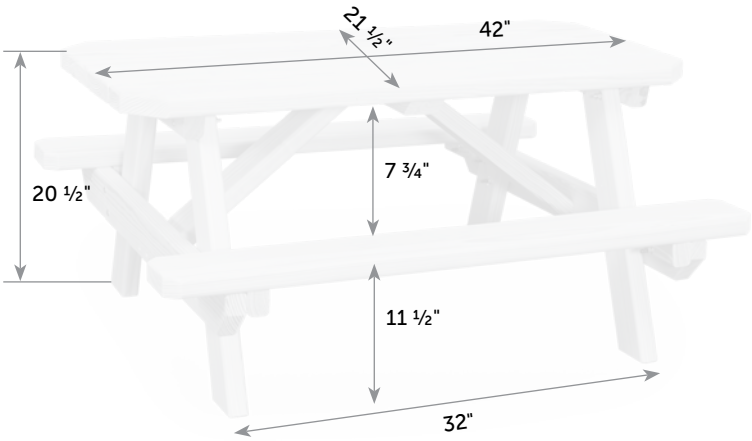

Child's Table with Benches

WO-PiC *Catalog Pg. 111*

Box
25" x 7" x 46"

Item #	lbs	Zones	2	3	4	5	6	7	8
WO-PiC	67		53.00	59.00	62.00	68.00	75.00	81.00	79.00

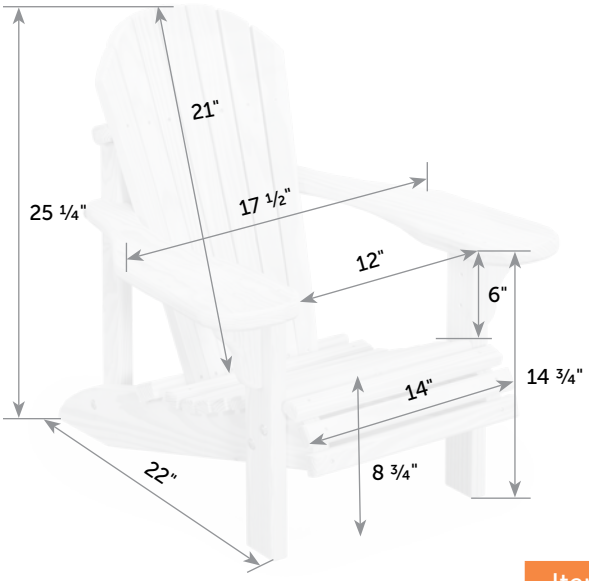

Child's Adirondack Chair

WO-ChC *Catalog Pg. 111*

Box
16" x 7" x 27"

Item #	lbs	Zones	2	3	4	5	6	7	8
WO-ChC	15		25.00	26.00	26.00	27.00	29.00	32.00	34.00

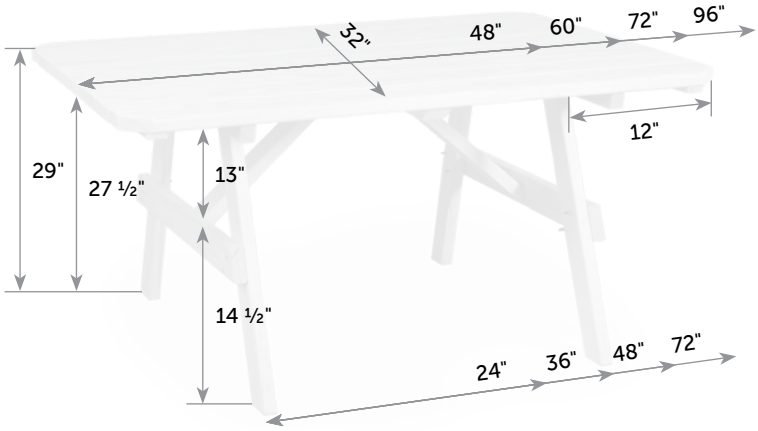

Plain Tables

Catalog Pg. 113

WO-Ta-32x48

Box

36" x 6" x 48"

WO-Ta-32x60
WO-Ta-32x72
WO-Ta-32x96

Freight

Item #	W x L	Lb.	Zones	2	3	4	5	6	7	8
WO-Ta-32x48	32" x 48"	60		238.00	239.00	242.00	245.00	253.00	259.00	265.00
WO-Ta-32x60	32" x 60"	82		389.00	389.00	399.00	399.00	409.00	409.00	419.00
WO-Ta-32x72	32" x 72"	102		390.00	390.00	390.00	390.00	390.00	405.00	426.80
WO-Ta-32x96	32" x 96"	145		390.00	390.00	390.00	390.00	425.00	425.00	479.00

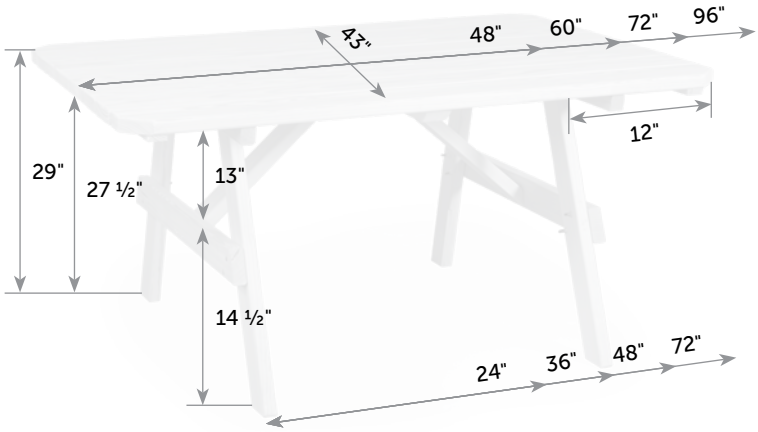

Plain Tables

Catalog Pg. 113

WO-Ta-43x48

Box

48" x 6" x 48"

WO-Ta-43x60
WO-Ta-43x72
WO-Ta-43x96

Freight

Item #	W x L	Lb.	Zones	2	3	4	5	6	7	8
WO-Ta-43x48	43" x 48"	85		245.00	245.00	248.00	251.00	258.00	264.00	272.00
WO-Ta-43x60	43" x 60"	106		389.00	389.00	399.00	399.00	409.00	409.00	419.00
WO-Ta-43x72	43" x 72"	122		390.00	390.00	390.00	390.00	390.00	405.00	426.80
WO-Ta-43x96	43" x 96"	155		390.00	390.00	390.00	390.00	425.00	425.00	479.00

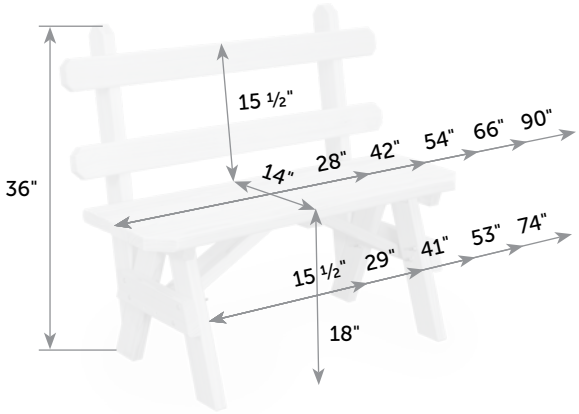

Benches with Backs

Catalog Pg. 113

Box

WO-BeB-28 19" x 7" x 29"
WO-BeB-42 19" x 7" x 43"
WO-BeB-54 19" x 7" x 55"
WO-BeB-66 19" x 7" x 67"

WO-BeB-90

Freight

Item #	L	Lb.	Zones	2	3	4	5	6	7	8
WO-BeB-28	28"	40		29.45	33.15	35.81	40.32	47.62	53.43	58.18
WO-BeB-42	42"	45		29.89	33.78	37.25	53.24	49.69	56.60	61.77
WO-BeB-54	54"	57		31.13	35.29	38.97	45.63	51.78	58.64	66.92
WO-BeB-66	66"	65		42.66	47.96	51.47	57.73	64.48	70.44	79.16
WO-BeB-90	90"	88		229.90	229.90	229.90	246.40	277.20	277.20	332.20

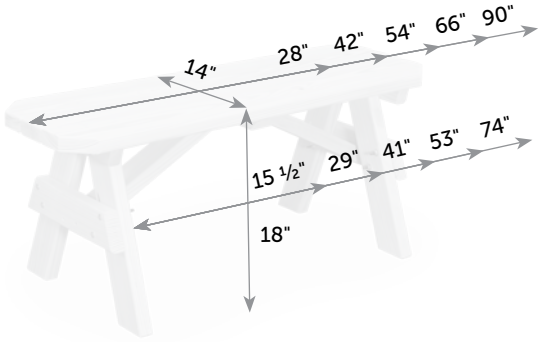

Benches

Catalog Pg. 113

Box

WO-Be-28 19" x 7" x 29"
WO-Be-42 19" x 7" x 43"
WO-Be-54 19" x 7" x 55"
WO-Be-66 19" x 7" x 67"

WO-Be-90

Freight

Item #	L	Lb.	Zones	2	3	4	5	6	7	8
WO-Be-28	28"	28		29.45	33.15	35.81	40.32	47.62	53.43	58.18
WO-Be-42	42"	34		29.89	33.78	37.25	53.24	49.69	56.60	61.77
WO-Be-54	54"	40		31.13	35.29	38.97	45.63	51.78	58.64	66.92
WO-Be-66	66"	46		42.66	47.96	51.47	57.73	64.48	70.44	79.16
WO-Be-90	90"	62		229.90	229.90	229.90	246.40	277.20	277.20	332.20

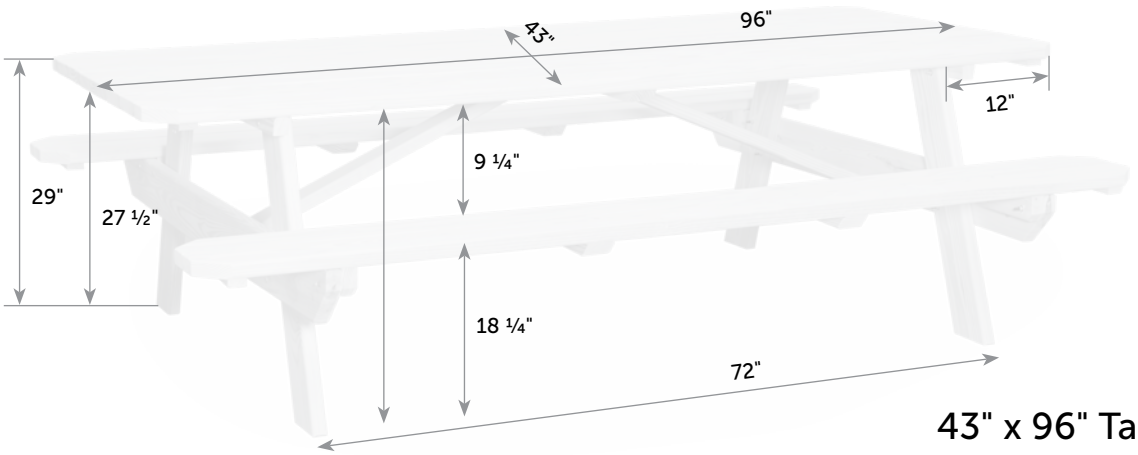

43" x 96" Table with Benches Attached

Catalog Pg. 113

Freight

Item #	lbs	Zones	2	3	4	5	6	7	8
WO-PiT-43x96	275		389.00	399.00	419.00	449.00	479.00	489.00	519.00

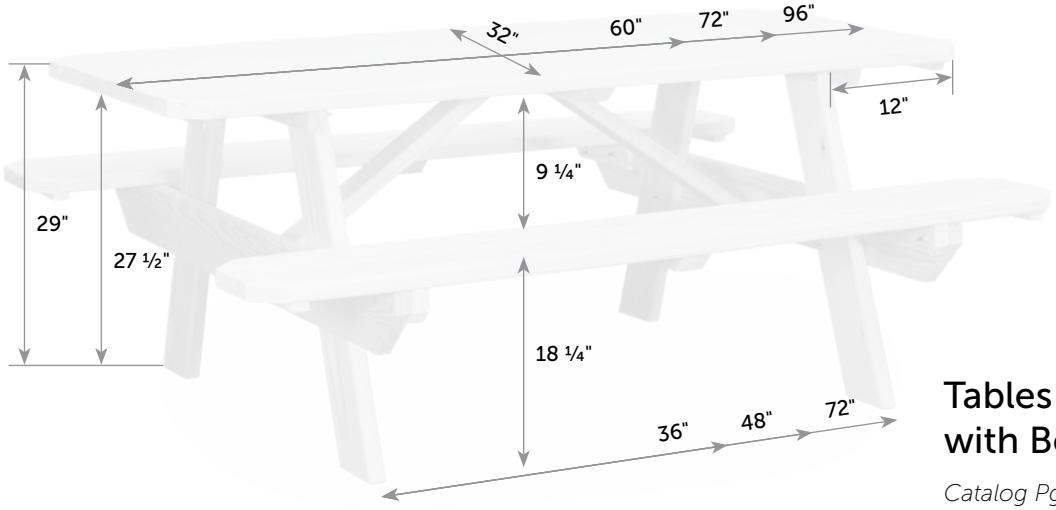

Tables with Benches Attached

Catalog Pg. 113

Freight

Item #	W x L	Lb.	Zones	2	3	4	5	6	7	8
WO-PiT-32x60	32" x 60"	140		389.00	399.00	409.00	419.00	429.00	439.00	489.00
WO-PiT-32x72	32" x 72"	173		389.00	399.00	409.00	419.00	429.00	439.00	489.00
WO-PiT-32x96	32" x 96"	230		389.00	399.00	419.00	449.00	479.00	489.00	519.00

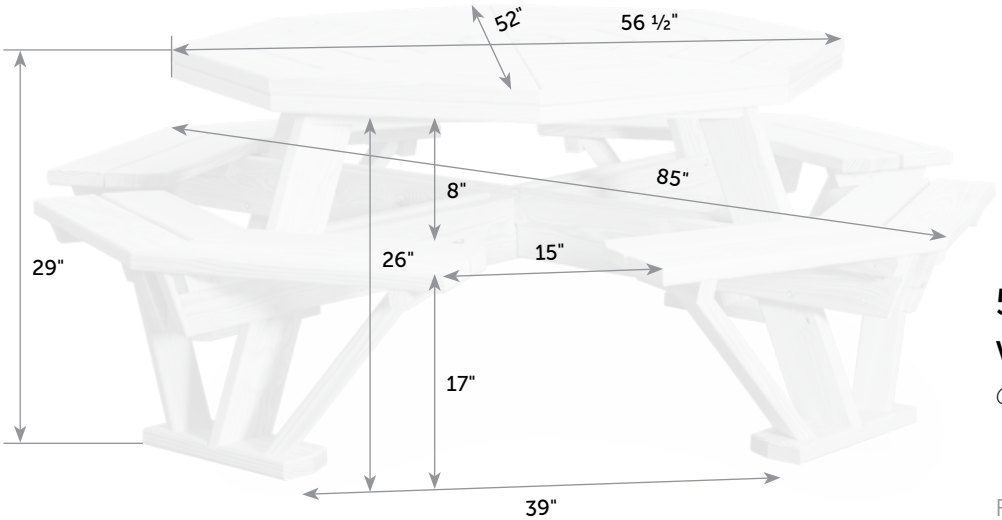

52" Octagon Table with Benches Attached

Catalog Pg. 113

Freight

Item #	lbs	Zones	2	3	4	5	6	7	8
WO-PiT-52o	276		449.00	499.00	639.00	699.00	819.00	839.00	899.00

Custom engraving is available for all poly and wood products.

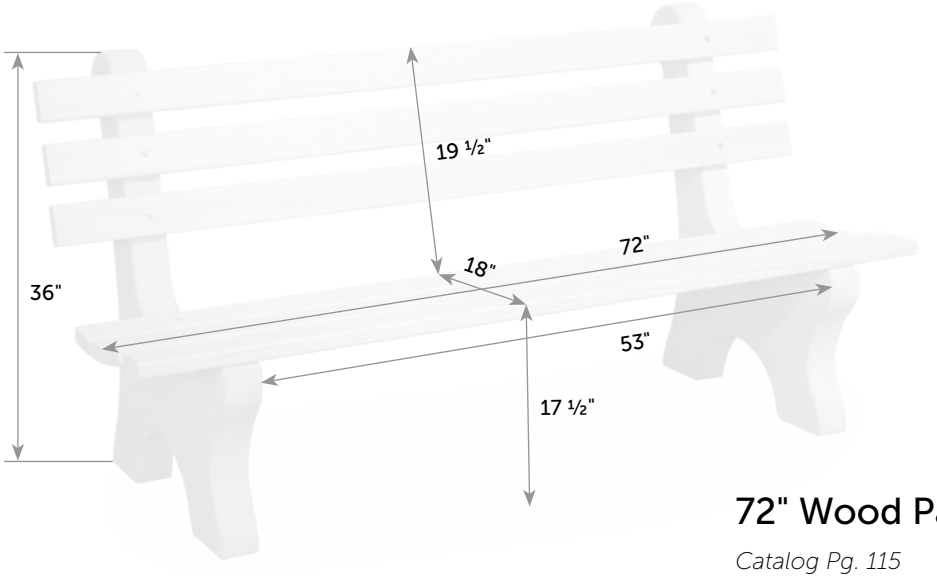

72" Wood Park Bench

Catalog Pg. 115

Freight

Item #	lbs	Zones	2	3	4	5	6	7	8
WO-PaB	255		389.00	399.00	409.00	435.00	499.00	529.00	589.00

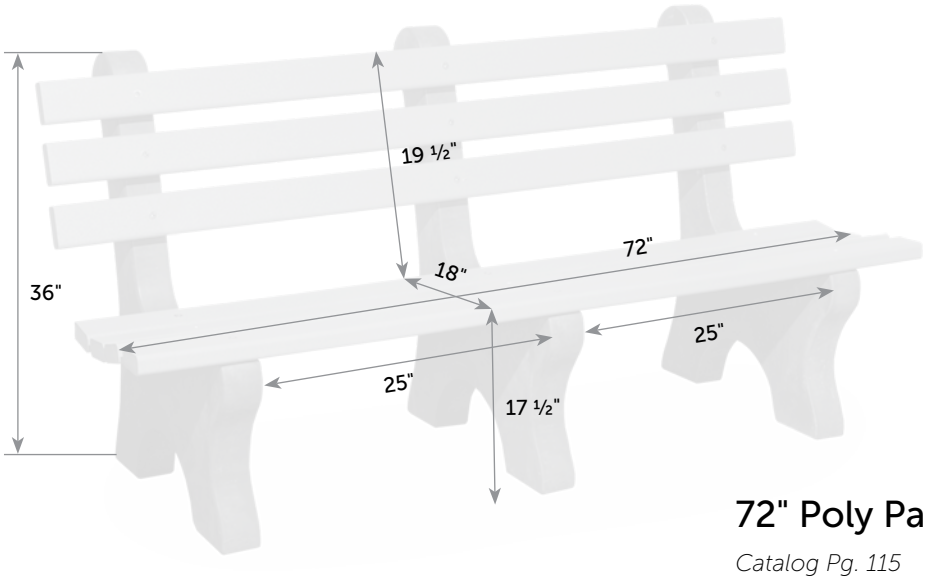

72" Poly Park Bench

Catalog Pg. 115

Freight

Item #	lbs	Zones	2	3	4	5	6	7	8
PA-Be	386		389.00	399.00	409.00	435.00	499.00	529.00	589.00

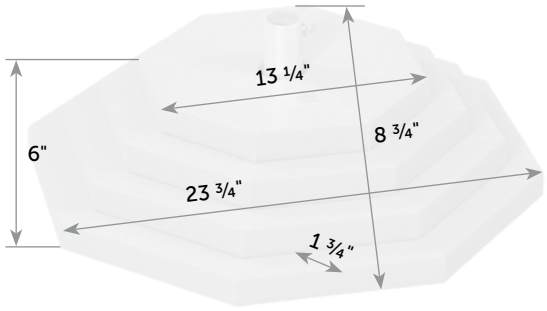

Poly Umbrella Base

UM-Ba *Catalog Pg. 117*

Box
25" x 6" x 25"

Item #	lbs	Zones	2	3	4	5	6	7	8
UM-Ba	40		27.00	29.00	33.00	37.00	45.00	49.00	55.00

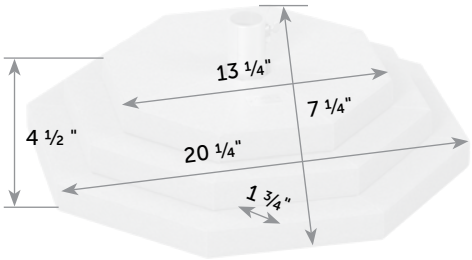

Small Poly Umbrella Base

UM-BaS *Catalog Pg. 117*

Box
25" x 6" x 25"

Item #	lbs	Zones	2	3	4	5	6	7	8
UM-BaS	26		27.00	29.00	33.00	37.00	45.00	49.00	55.00

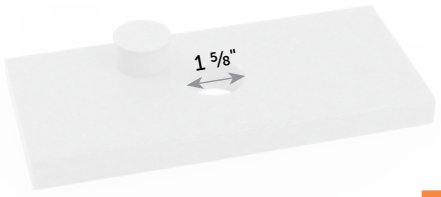

Poly Umbrella Hole Plug

UM-Pl *Catalog Pg. 117*

USPS

Item #	lbs	Zones	2	3	4	5	6	7	8
UM-Pl	<1		3.00	3.00	3.00	3.00	3.00	3.00	3.00

Which umbrella base fits my table?	
UM-Ba	Garden, Mission, Picnic & Octagon, 43" x 60" Great Bay
UM-BaS	29" Square, Round and 43" x 43" Great Bay, 42" & 48" Keystone
No Base Needed	72" and 96" Great Bay, 60" Keystone, 96" Garden and Mission

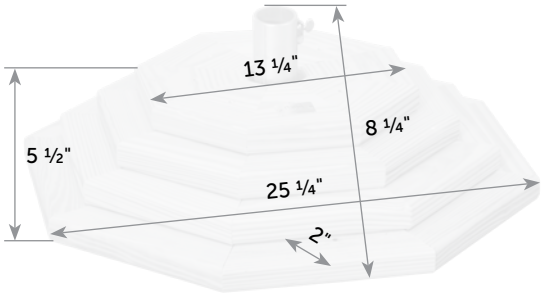

Wood Umbrella Base

WO-UmB *Catalog Pg. 117*

Box
25" x 6" x 25"

Item #	lbs	Zones	2	3	4	5	6	7	8
WO-UmB	30		27.00	29.00	33.00	37.00	45.00	49.00	55.00

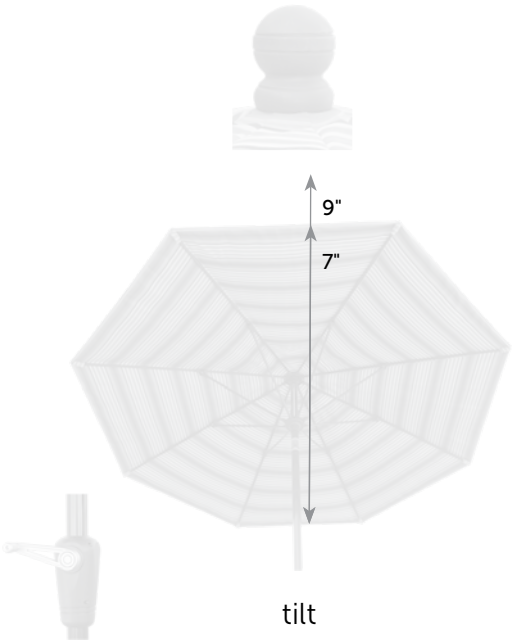

Aluminum Frame Umbrellas

Catalog Pg. 117

Box
Um-Al-7 7" x 7" x 59"
Um-Al-9 7" x 7" x 72"

Item #	lbs	Zones	2	3	4	5	6	7	8
Um-Al-7	15		35.00	36.00	36.00	37.00	55.00	59.00	63.00
Um-Al-9	25		46.00	47.00	48.00	51.00	55.00	59.00	63.00

finch

PRODUCT CARE

Finch furniture never needs to be painted or stained because it is built with recycled plastic that will not rot or splinter. The color will never wear off because it is embedded throughout the product. A UV protective agent keeps fading to a minimum. Poly furniture is not affected by most corrosive substances, and will not promote bacterial growth.

Cleaning is easy. Most dirt wipes away with nonabrasive soap and water using a soft sponge. Tight corners can be cleaned with a plastic bristled brush. Surface dust can simply be hosed off. Stubborn marks can be removed with a magic eraser. For rust spots, scrub the furniture with Iron Out. For a deep clean, use a pressure washer on the lightest setting and at no more than 1,500 psi. Do not place the tip of the pressure washer closer than 10"–12" from the furniture or it may damage the finish.

Surface protection - Flower pot residue should be removed regularly to prevent staining. Do not use sharp objects such as knives on your furniture. Avoid setting items with sharp edges on the furniture, including tools, metal, gravel, or dirty items. To avoid melting, do not place hot items directly onto the furniture.

All fasteners on Finch furniture are 316 grade stainless steel. This high grade stainless steel will not rust in a normal outdoor environment. If your furniture is heavily exposed to saltwater, occasionally rinse it with fresh water to maintain a rust-free surface.

All fasteners should be checked periodically for tightness.

Simple cleaning is all you need to do to enjoy beautiful Finch furniture for many years!

WARRANTY

Finch warrants to the original consumer purchaser that this polyethylene patio furniture product is free of defects in workmanship and materials. The warranty period is twenty (20) years of residential use and five (5) years of commercial use, with exceptions on certain parts as explained below, from the date of sale. This warranty does not cover damage caused by unauthorized service or repair; alteration or abuse, normal wear and tear on materials, or any attempt to use the product in a manner or for a purpose other than for which it is intended. Finch will repair or, at its option, replace the defective product without charge. Should Finch choose to replace the product, and the product is discontinued, a substitute product of similar function and equal or greater value will be made.

Polyethylene may scratch during normal use, fade slightly from exposure to sunlight, or stain after prolonged contact with other substances. These conditions are not defects and are not covered under this warranty.

Stainless steel fasteners are warranted to not fail structurally for the applicable warranty period if maintained according to the Care and Maintenance document. Swivels are warranted to not fail structurally for five (5) years of residential use. This warranty does not cover rusted fasteners and swivels, or structural failure due to rusted fasteners and swivels, resulting from improper maintenance. Cushions are warranted for a period of one (1) year of residential use. Compression of cushions is not considered a defect.

Finch makes no warranties other than those which are expressly described herein. Finch extends no implied warranty of merchantability or of fitness for a particular purpose, and disclaims all liability for indirect or consequential damages, including, but not limited to, lost profits or other economic or commercial losses. Some states do not allow the exclusion or limitation of indirect or consequential damages; therefore, the above limitation may not apply to you. The sole remedy provided in this warranty is repair or replacement of this product. Any cost of shipping and handling will be paid by you.

To file a warranty claim, contact your local dealer. Your claim must explain the nature of the defect and include your name, address, and telephone number. This warranty gives you specific legal rights and you may have other rights which vary from state to state. As defined by federal law, this is a limited warranty.

ABOUT

For a brand that started out as an industrial-grade awning fabric in only six colors, Sunbrella fabrics have come a long way. From awnings to marine to casual furniture, Sunbrella fabrics have led the industry with extensive styles and colors while providing unparalleled performance. In the early 1990s Sunbrella unveiled its softer side with stunning fabrics targeted at the interior design trade and now available in design showrooms across the country. Today, Sunbrella is used in a variety of innovative new products that offer creative solutions for consumers and the design community.

PRODUCT CARE

Outdoor Upholstery

Cleaning Removable Fabric

Hand Washing
Soak fabric in a solution of ¼ cup mild soap per gallon of lukewarm water. Use a sponge or very soft bristle brush to lightly agitate the stain. Then rinse thoroughly to remove all soap residue, and allow fabric to air dry.

Machine washing
Some removable casings can be washed in the washing machine, however consult the furniture manufacturer before removing the casing as cushion construction may vary. To wash, first close all zippers. Machine wash in cold water on the delicate cycle with normal amounts of mild laundry detergent. For severe mold or mildew, add 1 cup of bleach. Allow fabric to air dry.

Cleaning Non-Removable Fabric
Prepare a solution of ¼ cup mild soap per gallon of lukewarm water. Use a soft bristle brush to clean, allowing the cleaning solution to soak into the fabric. Rinse thoroughly to remove all soap residue and allow fabric to air dry.

Mold and mildew stains
Sunbrella fabrics do not promote mildew growth, however, mildew may grow on dirt and other foreign substances if not removed from the fabric. To remove mold or mildew:

- Prepare a solution of 1 cup of bleach and ¼ cup mild soap per gallon of water.
- Spray on entire area and allow to soak into the fabric for 15 minutes.
- Clean entire surface area with a sponge, clean towel or very soft bristle brush.
- Rinse thoroughly to remove all soap residue.
- Air dry.

For severe mold/mildew growth, bleach quantities may be increased.
It is best to clean the entire surface area of the fabric to avoid water rings and stains.
For information on cleaning other popular stains, see our Stain Chart. *www.sunbrella.com/stainchart*

WARRANTY

Sunbrella fabric's 10-year limited warranty for awning and marine fabric and 5-year limited warranty for furniture fabric are the best in the industry.

	Installation Prior to 11/1/2008	Installation After 11/1/2008
Sunbrella Awning and Marine Canvas	5 years	10 years
Sunbrella Furniture Fabrics and all other Sunbrella Fabrics	3 years	5 years

FedEx® SHIPPING ZONES

Contiguous U.S.

Destination ZIP	Zone	Destination ZIP	Zone	Destination ZIP	Zone	Destination ZIP	Zone	Destination ZIP	Zone	Destination ZIP	Zone
000-004	NA	254	2	428-429	NA	632	NA	795-796	6	988-994	8
005	2	255-257	4	430-438	4	633-641	5	797-816	7		
010-024	3	258-266	3	439-447	3	642-643	NA	817-819	NA		
025-026	4	267	2	448-475	4	644-658	5	820-831	7		
027-034	3	268	3	476-477	5	659	NA	832-838	8		
035	4	269	NA	478-497	4	660-662	5	839	NA		
036-037	3	270-278	4	498-509	5	663	NA	840-847	8		
038-049	4	279	3	510-512	6	664-666	6	848-849	NA		
050-055	3	280-299	4	513-514	5	667	5	850	8		
056	4	300-303	5	515	6	668-681	6	851	8		
057	3	304-309	4	516	5	682	NA	852-853	8		
058-059	4	310-312	5	517-519	NA	683-693	6	854	NA		
060-067	3	313-314	4	520-528	5	694-699	NA	855-857	8		
068-118	2	315-329	5	529	NA	700-701	6	858	NA		
119-123	3	330-332	6	530-532	5	702	NA	859-860	8		
124-127	2	333-342	5	533	NA	703-708	6	861-862	NA		
128	3	343	NA	534-535	5	709	NA	863-864	8		
129	4	344	5	536	NA	710-714	6	865	7		
130-136	3	345	NA	537-551	5	715	NA	866-869	NA		
137-139	2	346-347	5	552	NA	716-717	5	870-875	7		
140-147	3	348	NA	553-561	5	718	6	876	NA		
148-149	2	349-352	5	562	6	719-728	5	877-885	7		
150-154	3	353	NA	563-564	5	729-731	6	886-888	NA		
155	2	354-372	5	565-567	6	732	NA	889-891	8		
156	3	373-374	4	568-569	NA	733-741	6	892	NA		
157-159	2	375	5	570-577	6	742	NA	893-895	8		
160-165	3	376-379	4	578-579	NA	743-768	6	896	NA		
166-212	2	380-384	5	580-587	6	769	7	897-898	8		
213	NA	385	4	588	7	770-778	6	899	NA		
214-227	2	386-399	5	589	NA	779-785	7	900-908	8		
228-241	3	400-418	4	590-595	7	786-787	6	909	NA		
242	4	419	NA	596-599	8	788	7	910-928	8		
243-245	3	420	5	600-609	4	789	6	929	NA		
246-248	4	421-423	4	610-620	5	790-791	7	930-966	8		
249	3	424	5	621	NA	792	6	970-986	8		
250-253	4	425-427	4	622-631	5	793-794	7	987	NA		

FedEx® TRANSIT TIMES

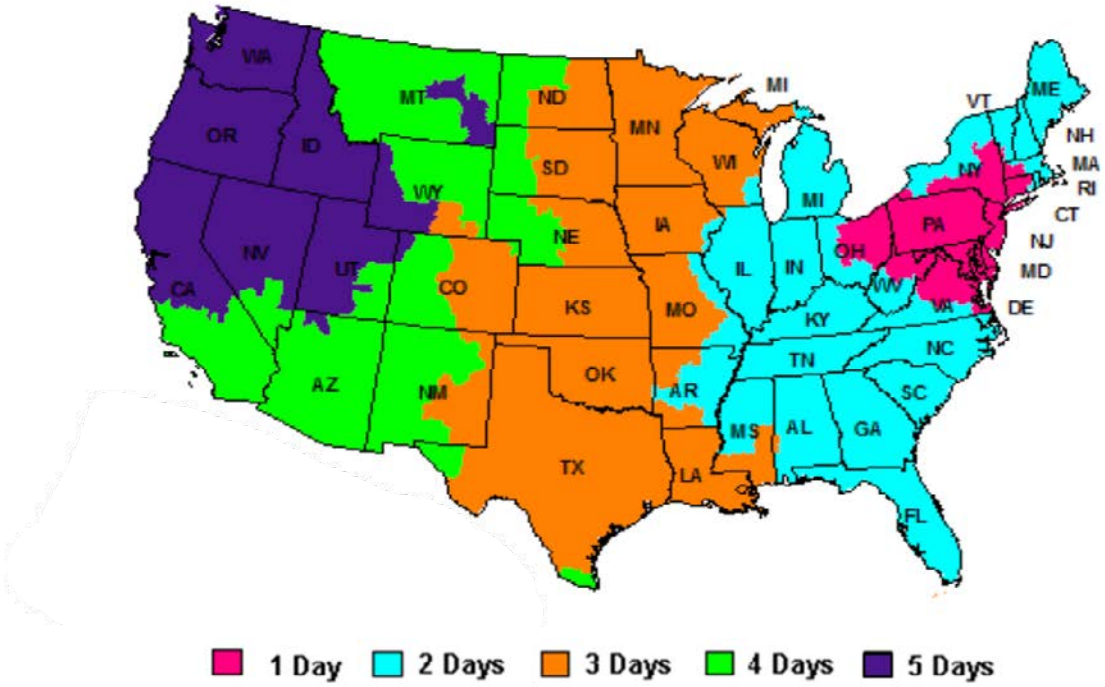

Made in
USA